HULL NO: S5130	MESSRS : SPP SHIPBUILDING CO.,LTD.	Rev. 5

ITEM :

TITLE : GROUP STARTER PANEL

KINDS OF SHIP :	DWT 49,999 TON PRODUCT OIL/CHEMICAL TANKER	CLASS :	DNV
		DRAWING NO. :	HME-SPP5130-GSP
SHIP OF OWNER :	BW EGERT	APPROVED BY	S.H.GOO
MAKER :	HME	CHECKED BY	S.D.EOM
		DESIGNED BY	S.Y.LEE

PLAN HISTORY

REV.	DATE	DESCRIPTION
0	JUL. 22. '13	ISSUED FOR APPROVAL(ONLY LAYOUT)
	AUG. 12. '13	ISSUED FOR APPROVAL(FULL)
	AUG. 24. '13	ISSUED FOR APPROVAL(REVISED AS OWNER'S COMMENTS) : MODIFIED COLOR OF LAMPS(ST'BY:BLUE -> YELLOW, SPACE HEATER:YELLOW -> BLUE)
	SEP. 11. '13	ISSUED FOR APPROVAL(REVISED AS OWNER'S COMMENTS) : CORRECTED SEQUENTIAL START DELAY TIME AT UNDER VOLTAGE(COMMENT NO.17) (PAGE. G21, G22) : ADDED NOTE FOR COLOR OF LAMPS(COMMENT NO.18) (PAGE. G10, G11) : CORRECTED AMPERAGE DATA OF M.G.O SHIFTING PUMP(COMMENT NO.22) (PAGE. G22) : MODIFIED MCCB TYPE TO NEW MODEL(COMMENT NO.23,24) (PAGE. G21, G22)
	NOV. 05. '13	ISSUED FOR APPROVAL(REVISED AS OWNER'S COMMENTS) : ADDED DOOR STOPPERS TO LAYOUT DRAWINGS(COMMENT NO.6) (PAGE. L01, L03)
1	NOV. 26. '13	ISSUED FOR WORKING(REVISED AS YARD DIAGRAM_REV.1 & DESIGN DEVELOPMENT) : REPLACED LOCATION OF YARD CABLE TO UPPER FROM BOTTOM(P2504/MC7, P3103/MC7) (PAGE. L01, L03, SD111, SD209) : ADDED TERMINAL ARRANGEMENT SHEETS (PAGE. T01~T04, T06~T08, T11~T13) : FILLED IN PART LIST SHEETS (PAGE. G23, G24)
2	DEC. 04. '13	ISSUED FOR WORKING(REVISED AS YARD DIAGRAM_REV.2) : MODIFIED CAPACITY OF NO.1/2 S/T L.O PUMP & TYPE OF RPB(LOCATED EFP-40) FOR NO.1/2 FIRE, BILGE & G/S PUMP (PAGE. G21~G24, SD107A, SD114, SD202, SD205A)
3	MAR. 27. '14	ISSUED FOR WORKING(REVISED AS DIAGRAM_REV.4) : MODIFIED CABLE ENTRY UPPER CHANGED & ADDED CABLE GLAND (PAGE. L01, L03, T02, T04, T06,)
4	APR. 07. '14	ISSUED FOR WORKING(REVISED AS DESIGN DEVELOPMENT) : MODIFIED NO.1/2 FIRE, BILGE & G/S PUMP FOR BWTS READY SIGNAL (PAGE. G20,L01,L02,L03,L04,SD107A,SD107B,SD205A,SD205B,T08,T13)
5	MAY. 02. '14	ISSUED FOR WORKING(REVISED AS DIAGRAM_REV.5) : NAME OF CO2 TRIP IS CHANGED CT TO CT1 (PAGE. G16,G18,G19,SD106A,SD206A,SD207,T04,T08)
6	OCT. 27. '14	ISSUED FOR OWNER COMMENT : CHANGED SHIP TYPE & FLAG & SHIP OWNER (PAGE. : COVER, G03)

REV.	DATE	DESCRIPTION

PROJECT No. S5130			TITLE	PLAN HISTORY	
0 1 2 3 4 5 / 6 7 8 9 10 11	HME		SHEET No.	G01	

CONTENTS

No.	DRAWING NAME	Sheet No.
1	PLAN HISTORY	G01
2	CONTENTS	G02
3	GENERAL SPECIFICATION	G03
4	BREAKING CAPACITY LIST OF MOLDED CASE CIRCUIT BREAKER	G04
5	BREAKING CAPACITY LIST OF FUSE	G05
6	SYMBOL LIST	G06~G07
7	AUX. RELAY LIST	G08
8	LEGEND OF DRAWINGS	G09~G10
9	START MODULE PATTERN	G11~G12
10	NAME PLATE MODEL LIST & NAME PLATE LIST	G13~G20
11	SPECIFICATION LIST	G21~G22
12	PART LIST	G23~G24
13	OUTLINE VIEW	L01~L04
14	SCHEMATIC DIAGRAM	SD101A~SD114, SD201A~SD213
15	TERMINAL ARRANGEMENT	T01~T04, T06~T08 T11~T13
16	SPARE PART LIST	
17		
18		
19		
20		
21		
22		
23		
24		
25		
26		

No.	DRAWING NAME	Sheet No.
27		
28		
29		
30		
31		
32		
33		
34		
35		
36		
37		
38		
39		
40		
41		
42		
43		
44		
45		
46		
47		
48		
49		
50		
51		
52		

0	1	2	3	4	5
6	7	8	9	10	11

PROJECT No.	S5130	TITLE	CONTENTS
	HME	SHEET No.	G02

GENERAL SPECIFICATION

GENERAL	SHIP OWNER	BW EGRET	FLAG	SINGAPORE
	KIND OF VESSEL	DWT 49,999 TON PRODUCT OIL/CHEMICAL TANKER	CLASSIFICATION	DNV
	SHIP NO.	S5130		

PANEL	TYPE	☐ WALL MOUNTING ☑ SELF STANDING	ENCLOSURE	☑ IP 22 ☐ IP 44 ☐ IP 56
	SIDE COVER	☐ WITH ☑ WITHOUT	FOUNDATION	☐ YARD SUPPLY ☑ MAKER SUPPLY
	FRONT COVER	☑ HINGED TYPE ☐ HOOKED TYPE ☐ HINGED & HOOKED TYPE ☐ N/A	REAR COVER	☐ HINGED TYPE ☐ HOOKED TYPE ☑ HINGED & HOOKED TYPE ☐ N/A
	PAINT COLOR	MUNSELL NO. 7.5 BG 7/2	MATERIAL	STEEL 2.3t

ENVIRONMENT	TEMPERATURE	45˚C	HUMIDITY	
DRAWING & DOCMENT	LANGUAGE	☑ ENGLISH ☐ KOREAN ☐ ENG. + KOR.		
NAME PLATE	LANGUAGE	☑ ENGLISH ☐ KOREAN ☐ ENG. + KOR.	MATERIAL	☑ PHENOLIC ☐ SUS304 ☑ ALUMINUM

ELECTRIC SPECIFICATION		MATERIAL	IDENTIFICATION			ARRANGEMENT		
	BUS BAR	COPPER (TIN COATING)	AC	R :	☑ RED ☐ GREEN	LEFT	TOP	FRONT
				S :	☑ WHITE ☐ YELLOW	↓	↓	↓
				T :	☑ BLUE ☐ BROWN	RIGHT	BOTTOM	REAR
	INTERNAL WIRING	MAIN CIRCUIT : 660V SCP (85˚C) CONTROL CIRCUIT : 0.6/1KV UL1015 AWG17	DC	P :	☑ RED ☐ WHITE			
				N :	☑ BLUE ☐ BLACK			

SCOPE OF SUPPLY	
NO.1 GROUP STARTER PANEL	1 SET / SHIP
NO.2 GROUP STARTER PANEL	1 SET / SHIP

MANAGEMENT							
	SHIP NO.	S5130	S5131	S5132	S5133	S5134	S5135
	PROJECT NO.						
	SHIP NO.						
	PROJECT NO.						

PROJECT No.	S5130	TITLE	GENERAL SPECIFICATION
	HME	SHEET No.	G03

0	1	2	3	4	5
6	7	8	9	10	11

MOLDED CASE CIRCUIT BREAKERS

MODEL NO.			MAXIMUM CURRENT RATING (A)	AC 440/460V		AC 220/240V		USED
				RATED BREAKING CURRENT Sym. Rms (kA)	RATED MAKING CURRENT Asym. Peak (kA)	RATED BREAKING CURRENT Sym. Rms (kA)	RATED MAKING CURRENT Asym. Peak (kA)	
MANUFACTURER : HHI-EES	UCB-( )R SERIES	UCB100R	125A	25	52.5	50	105	
		UCB250R	250A	18	37.8	35	73.5	
		UCB400R	400A	25	52.5	35	73.5	
		UCB630R	630A	35	73.5	50	105	
		UCB800R	800A	35	73.5	50	105	
	UCB-( )S,N SERIES	UCB100S	125A	35	73.5	65	136.5	
		UCB250S	250A	25	52.5	50	105	
		UCB400S	400A	35	73.5	50	105	
		UCB630S	630A	50	105	100	210	
		UCB800S	800A	50	105	100	210	
		UCB250N	250A	35	73.5	65	136.5	
	UCB-( )H SERIES	UCB100H	125A	42	88.2	85	178.5	○
		UCB250H	250A	42	88.2	85	178.5	○
		UCB400H	400A	50	105	85	178.5	○
		UCB630H	630A	65	136.5	100	210	
		UCB800H	800A	65	136.5	100	210	

PROJECT No.	TITLE	BREAKING CAPACITY LIST OF MOLDED CASE CIRCUIT BREAKER
S5130	SHEET No.	G04

HME

FUSE

MODEL NO.		RATED CURRENT (A)	RATED VOLTAGE (V)	RATED FREQUENCY (Hz)	RATED BREAKING CURRENT (kA)		USED
					AC500V (kA)	DC250V (kA)	
MANUFACTURER : SB FUSE	SB-C1	1	AC500 / DC250	50 / 60	100	50	○
		2					
		3					○
		4					
		5					
		6					
		8					
		10					
		15					
		20					
		25					
		30					
		40					
		50					
		60					

PROJECT No.	S5130	TITLE	BREAKING CAPACITY LIST OF FUSE
	HME	SHEET No.	G05

SYMBOL LIST

No.	SECTION	SYMBOL	DESCRIPTION
01	MACHINERY	G ~	AC GENERATOR
02		M ~	AC MOTOR
03		GM	GOVERNOR MOTOR
04			
05			
06	METER	V ~	AC VOLT METER
07		A ~	AC AMMETER
08		W ~	AC WATTMETER
09		F ~	AC FREQUENCY METER
10		IM	INSULATION RESISTANCE METER
11		RHM	RUN HOUR METER
12		SY	SYNCHROSCOPE
13			
14			
15	PROTECTION DEVICE	ACB ACB	AIR CIRCUIT BREAKER (DRAW-OUT TYPE)
16		ACB ACB	AIR CIRCUIT BREAKER (FIXED TYPE)
17		MCCB	MOLDED CASE CIRCUIT BREAKER
18		F F	FUSE
19		DS DS	DISCONNECTION SWITCH
20			
21			

No.	SECTION	SYMBOL	DESCRIPTION
22	RELAY	aXb	COIL OF MAGNETIC & AUXILIARY RELAY
23		aTb	COIL OF TIME RELAY
24			
25			
26			THERMAL RELAY
27	CONTACT		"a" CONTACT (NORMALLY OPEN)
28			"b" CONTACT (NORMALLY CLOSE)
29			"c" CONTACT (TRANSFER)
30			"a" CONTACT OF TIME RELAY (ON DELAY)
31			"b" CONTACT OF TIME RELAY (ON DELAY)
32			"a" CONTACT OF TIME RELAY (OFF DELAY)
33			"b" CONTACT OF TIME RELAY (OFF DELAY)
34			FLICKER CONTACT
35			"a" CONTACT FOR PUSH BUTTON
36			"b" CONTACT FOR PUSH BUTTON
37			"a" CONTACT FOR PUSH BUTTON(LOCKING TYPE)
38			"b" CONTACT FOR PUSH BUTTON(LOCKING TYPE)
39			"a" CONTACT FOR THERMAL RELAY
40			"b" CONTACT FOR THERMAL RELAY
41			"a" CONTACT FOR MECHANICAL CONTACT
42			"b" CONTACT FOR MECHANICAL CONTACT

PROJECT No. S5130		TITLE	SYMBOL LIST
HME		SHEET No.	G06

SYMBOL LIST

No.	SECTION	SYMBOL	DESCRIPTION
43	WIRE		CLOSSING ELECTRIC WIRE
44			CONNECTION OF ELECTRIC WIRE
45			
46			
47	TERMINAL BLOCK		TERMINAL FOR OUSIDE WIRING
48			TERMINAL OF PARTS
49			
50			
51	COIL	UVT	UNDER VOLTAGE TRIP COIL
52		SHT	SHUNT TRIP COIL
53			
54			
55	SWITCH	2 1 4 3	CAM SWITCH
56			
57			
58			
59	TRANSFORMER		TRANSFORMER
60		PT	POTENTIAL TRANSFORMER
61		CT	CURRENT TRANSFORMER
62			
63			

No.	SECTION	SYMBOL	DESCRIPTION
64	LAMP	aLb	PILOT LAMP (a : SERIAL NO. b : COLOR)
65			
66			
67			EARTH
68			
69			
70			
71			
72			
73			
74			
75			
76			
77			
78			
79			
80			
81			
82			
83			
84			

PROJECT No. S5130		TITLE	SYMBOL LIST
HME		SHEET No.	G07

0 1 2 3 4 5
6 7 8 9 10 11

AUX. RELAY LIST

TYPE	CONNECTION
UMC9 UMC12 (1a or 1b)	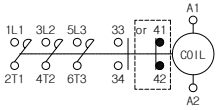
UMC18 UMC25 UMC32	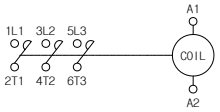
UMC40 UMC50 UMC65	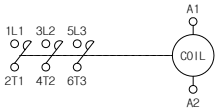
UMC75 UMC80 UMC100	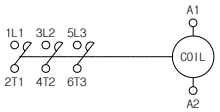
UMC115 UMC130 UMC150 (2a+2b)	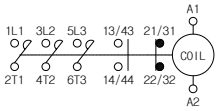
UMC185 UMC225 UMC265 (2a+2b)	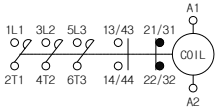

TYPE	CONNECTION
UMX31 (3a+1b)	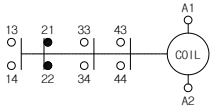
UAB22 (2a+2b)	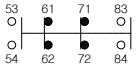
UAB31 (3a+1b)	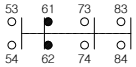
UAL65 UAL100 UAL400 (1a+1b)	
UAL400A (1a+1b)	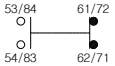
UAL65D UAL100D (1a+(1b))	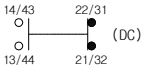

TYPE	CONNECTION
GTN-YD (2C)	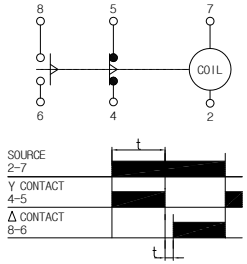
HR705-4PL (4C)	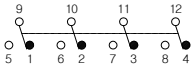
H3CR-H8L (2C)	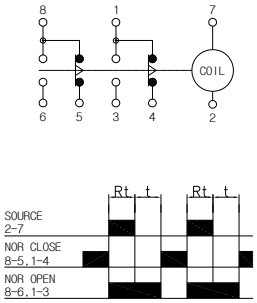

TYPE	CONNECTION
H3BA-N8H (2C & INST)	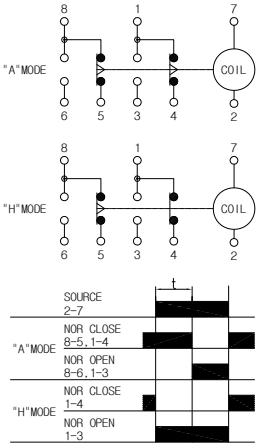
H3BA-N (2C)	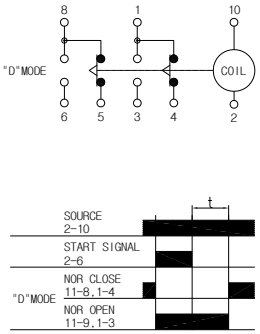

0	1	2	3	4	5						
6	7	8	9	10	11						

PROJECT No.	S5130	TITLE	AUX. RELAY LIST
	HME	SHEET No.	G08

LEGEND OF DRAWINGS

1. Description of the symbols for wiring part.

ex 1)

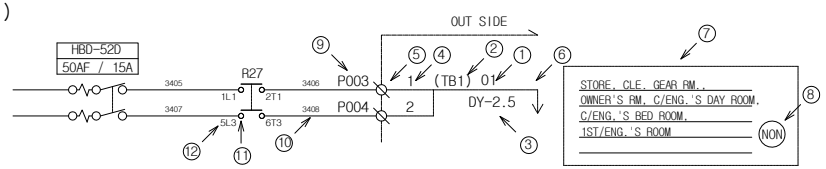

① It means the CIRCUIT NO. of the external yard cable.

② It means the name of the terminal group connected to external.
It is also indicated in the drawing of Terminal block arrangement.

③ It means the SPECIFICATION of the external yard cable.

④ It means the CORE NO. of the external yard cable.

⑤ It means the terminal block connected to the external yard cable.
If the part connected to the external yard cable is close to the cable entrance and easy to connect the yard cable, Not to set it is possible.
An example for APPLICATION is as follws:

ex 2)

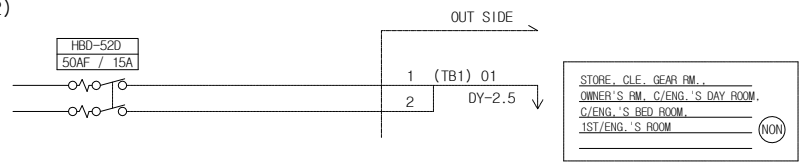

⑥ It means the entrance to the external yard cable.
The forms of expression is as follows:
↓ : LOWER ↑ : UPPER

⑦ It is a description of the external equipment connected.

⑧ It means the kind of the circuit to be composed.
The forms of expression is as follows:
NON : NOT APPLICATION SHT : SHUNT TRIP UVT : UNDER VOLTAGE TRIP
ES : EM'CY STOP

⑨ It means the name of the terminal block connected and the external yard cable.

⑩ It is the name of the internal cable. All internal cable has the name of their own.
The forms of expression is as follows:

10-1) POWER CIRCUIT

In case of AC, [a] R [b] / [a] S [b] / [a] T [b]

In case of DC, [a] P [b] / [a] N [b]

a: Voltage classification

0 --- 400 - 460V
1 --- 100 - 115V
2 --- 200 - 230V
3 --- 380V
4 --- 22 - 32V
5 --- 21 - 1V

b: Serial No. (1-n)

10-2) CONTROL CIRCUIT

[a] [b] a: Page on which the connection diagram is given (01 ~ 99)
b: Serial No. (01 ~ 99)

⑪ It means the terminal block of the internal part.

⑫ It means the terminal block name of the internal part.

PROJECT No.	TITLE	
S5130	TITLE	LEGEND OF DRAWINGS
HME	SHEET No.	G09

0	1	2	3	4	5
6	7	8	9	10	11

LEGEND OF DRAWINGS

2. Description of the symbols for switch & lamp.

KIND OF PART	SYMBOL	NAME DESCRIPTION	COLOR
LAMP	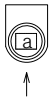 Fill the color related on this	a L b a : color b : Serial No.(1 ~ n)	R -- RED W -- WHITE G -- GREEN O -- ORANGE
SWITCH		PB b a : color b : Serial No.(1 ~ n)	R -- RED B -- BLUE G -- GREEN
SWITCH WITH LAMP		a LP b a : color b : Srial No.(1 ~ n)	R -- RED W -- WHITE G -- GREEN O -- ORANGE
CHANGE OVER SWITCH		COS b b : Serial No.(1 ~ n)	R -- RED B -- BLACK
SELECT SWITCH		SS b b : Serial No.(1 ~ n)	R -- RED B -- BLACK
NOTE.	If a given lamp is with two bulbs of different colors, it is indicated by a composition like "RGL" ⟹ RL & GL		

3. Coordinates

The coordinates is used to link the cutoff of the wiring drawing, when decoding the drawing, it is possible to grasp the continuous flow of the wiring drawing through it.

1) Coordinates application in wiring part

ex 1)

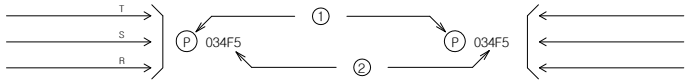

① It is the signal for the coordinates existing.

② It indicates a direction indicated by the coordinates.

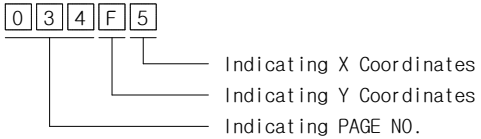

2) Coordinates application in relay contact part

ex 2)

HMX22(4-5)

A	B
04/1A	
04/2A	
	04/1A

Above is the relay contact table.

2-1) As no.9 and no.5 are contact A of 24-1, they indicate that 31 page/ X coordinates : B / Y coordinates : 4 is located.

2-2) As no.10 and no.2 are contact B of 24-1, they indicate that 31 page/ X coordinates : B / Y coordinates : 6 is located.

PROJECT No.	TITLE	LEGEND OF DRAWINGS
S5130		
HME	SHEET No.	G10

CONTROL DEVICES AND INDICATING LAMPS

STARTER MODULE

TYPE : CONSN

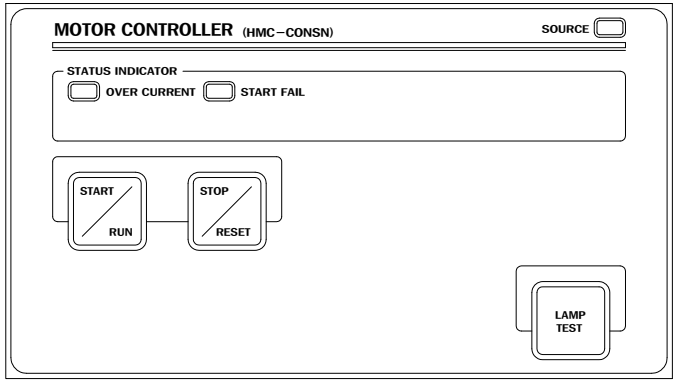

TYPE : CONSH

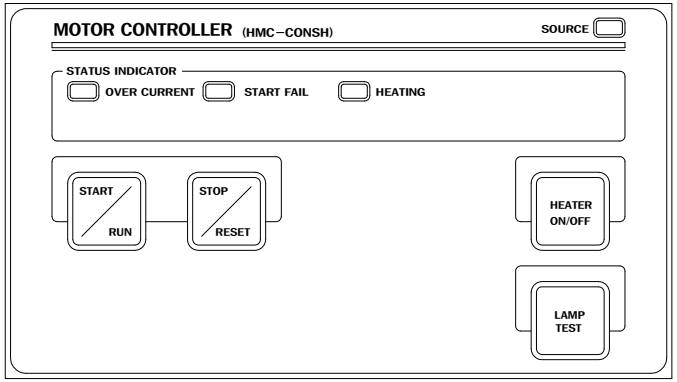

TYPE : COASN

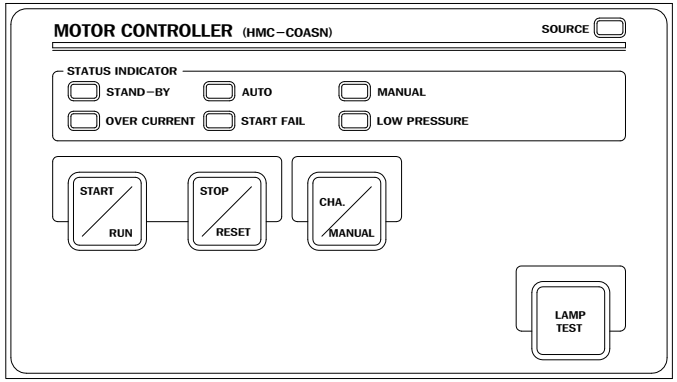

TYPE : COASH

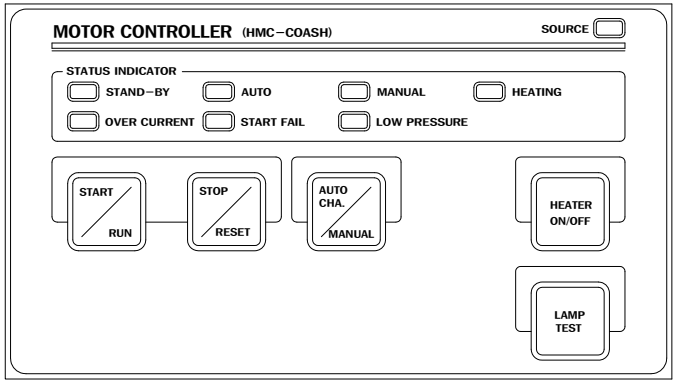

*NOTE
1. SOURCE LAMP : WHITE
2. RUNNING LAMP : GREEN
3. STOP LAMP : RED
4. SPACE HEATER HEATING LAMP : BLUE
5. STAND-BY LAMP : YELLOW
6. ALARM LAMP : RED

0	1	2	3	4	5
6	7	8	9	10	11

PROJECT No.	S5130	TITLE	START MODULE PATTERN
HME		SHEET No.	G11

CONTROL DEVICES AND INDICATING LAMPS

STARTER MODULE

TYPE : CTNSN

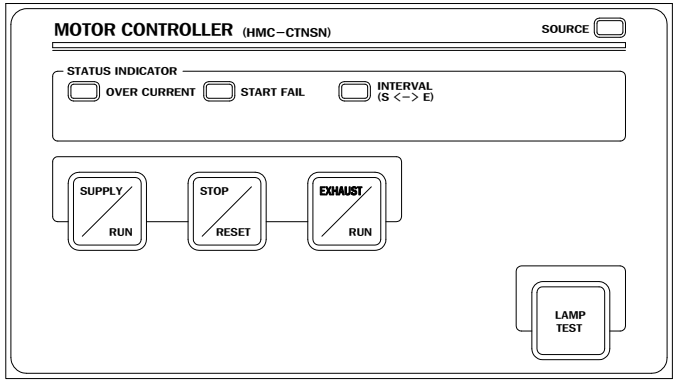

TYPE : CTNSH

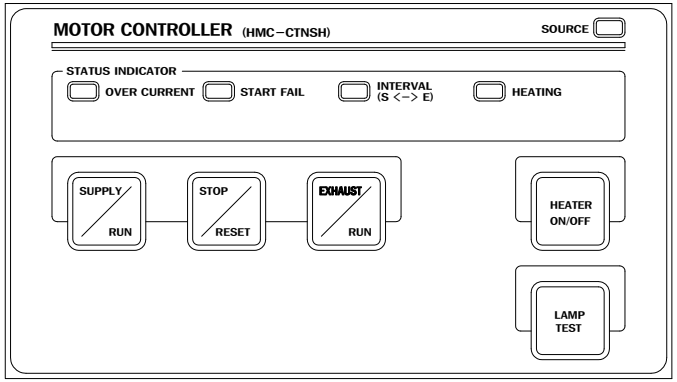

*NOTE
1. SOURCE LAMP : WHITE
2. RUNNING LAMP : GREEN
3. STOP LAMP : RED
4. SPACE HEATER HEATING LAMP : BLUE
5. STAND-BY LAMP : YELLOW
6. ALARM LAMP : RED

0	1	2	3	4	5
6	7	8	9	10	11

PROJECT No.	S5130	TITLE	START MODULE PATTERN
HME		SHEET No.	G12

NAME PLATE MODEL LIST

SECTION	DESIGN	TYPE	DEMENSION				COLOR		MATERIAL	REMARK
			H	L	D	T	LETTER	GROUND		
PANEL	HOLE SIZE : 4.5mm 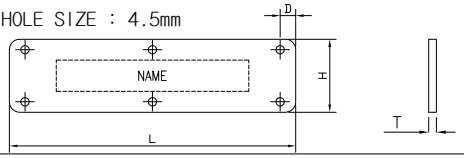	TYPE-MA	50	300	5	2	☐ BLACK	■ BLACK	■ PHENOLIC	
		TYPE-MB	60	200	5	2	■ WHITE	☐ WHITE	☐ SUS304	
		TYPE-MC	40	150	5	2			☐ ALUMINIUM	
FEEDER CIRCUIT (2P)	HOLE SIZE : 4.5mm 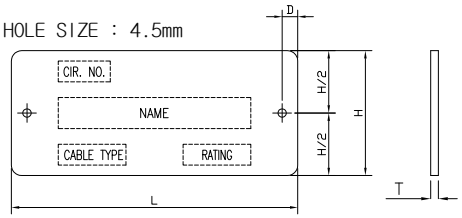	TYPE-2A	30	100	5	2	☐ BLACK	■ BLACK	■ PHENOLIC	
		TYPE-2B	40	90	5	2	■ WHITE	☐ WHITE	☐ SUS304	
									☐ ALUMINIUM	
FEEDER CIRCUIT (4P)	HOLE SIZE : 4.5mm 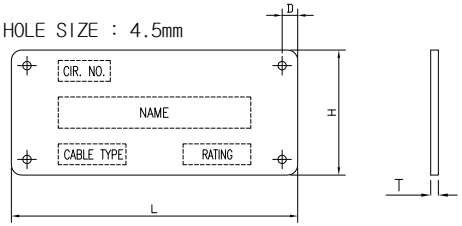	TYPE-4A	60	90	5	2	☐ BLACK	■ BLACK	■ PHENOLIC	
		TYPE-4B	80	90	5	2	■ WHITE	☐ WHITE	☐ SUS304	
		TYPE-4C	40	150	5	2			☐ ALUMINIUM	
FUSE CIRCUIT	HOLE SIZE : 3.5mm 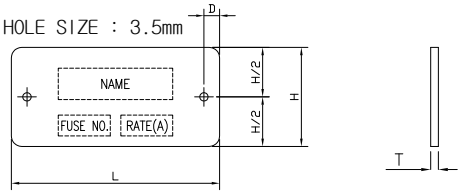	TYPE-FA	30	60	4	2	☐ BLACK	■ BLACK	■ PHENOLIC	
		TYPE-FB	25	45	4	2	■ WHITE	☐ WHITE	☐ SUS304	
									☐ ALUMINIUM	
PARTS	HOLE SIZE : 3.5mm 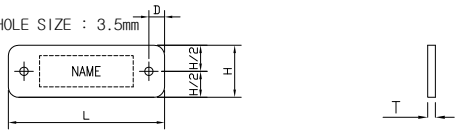	TYPE-PA	20	60	4	2	☐ BLACK	■ BLACK	■ PHENOLIC	
		TYPE-PB	25	100	5	2	■ WHITE	☐ WHITE	☐ SUS304	
									☐ ALUMINIUM	

PROJECT No.	S5130	TITLE	NAME PLATE MODEL LIST
	HME	SHEET No.	G13

NAME PLATE MODEL LIST

SECTION	DESIGN	TYPE	DEMENSION				COLOR		MATERIAL	REMARK
			H	L	D	T	LETTER	GROUND		
PANEL WITH SPEC.	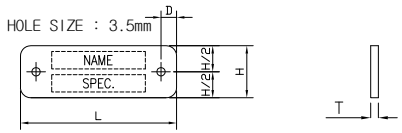	TYPE-SA	20	60	4	2	☐ BLACK	■ BLACK	■ PHENOLIC	
		TYPE-SB	25	100	5	2	■ WHITE	☐ WHITE	☐ SUS304	
									☐ ALUMINIUM	
INDICATION LAMP & PUSH BUTTON	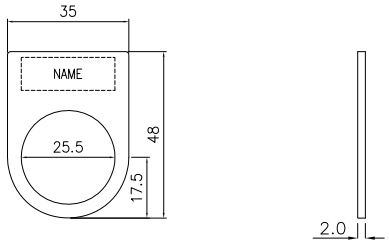	TYPE-CS1					☐ BLACK ■ WHITE	■ BLACK ☐ WHITE	■ PHENOLIC ☐ SUS304 ☐ ALUMINIUM	
SELECT SWITCH (WITHOUT NAME)	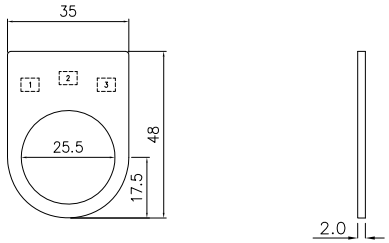	TYPE-CS2					☐ BLACK ■ WHITE	■ BLACK ☐ WHITE	■ PHENOLIC ☐ SUS304 ☐ ALUMINIUM	
SELECT SWITCH (WITH NAME)	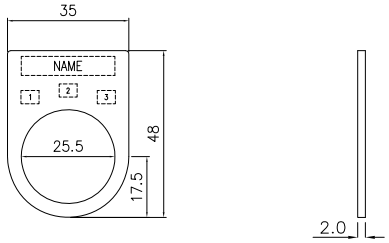	TYPE-CS3					☐ BLACK ■ WHITE	■ BLACK ☐ WHITE	■ PHENOLIC ☐ SUS304 ☐ ALUMINIUM	

PROJECT No. S5130		TITLE	NAME PLATE MODEL LIST
HME		SHEET No.	G14

0	1	2	3	4	5
6	7	8	9	10	11

NAME PLATE MODEL LIST

NO.	TYPE	SYMBOL	LETTERS ON NAME PLATE								SWITCH TYPE	Q'TY	REMARKS
			1	2	3	4	5	6	7	8			
1	A	COS1				NO.1 LEAD NO.2 FOLLOW	MANU.	NO.1 FOLLOW NO.2 LEAD					
2													
3													
4													
5													
6													
7													
8													
9													
10													
11													
12													
13													
14													
15													
16													
17													
18													
19													
20													

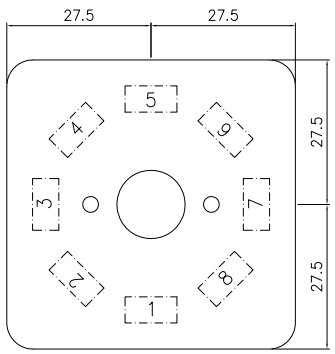

TYPE "A"

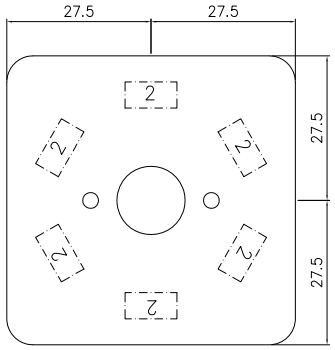

TYPE "B"

**NOTE
1. MATERIAL ------- ALUMINIUM
2. LETTER COLOR : WHITE
3. GROUND COLOR : BLACK

PROJECT No.	TITLE	NAME PLATE MODEL LIST
S5130		
HME	SHEET No.	G15

0	1	2	3	4	5
6	7	8	9	10	11

NAME PLATE MODEL LIST

SECTION	DESIGN	TYPE	COLOR		MATERIAL	REMARK	Q'TY
			LETTER	GROUND			
SEQUENTIAL START TIME	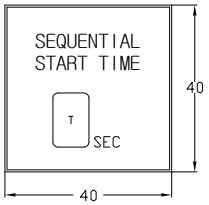	TYPE-ST	■ BLACK □ WHITE	□ BLACK ■ YELLOW	■ PHENOLIC □ SUS304 □ ALUMINIUM	0 Sec.	-
						5 Sec.	4
						10 Sec.	5
						15 Sec.	6
						20 Sec.	5
A-M SELECT MODE	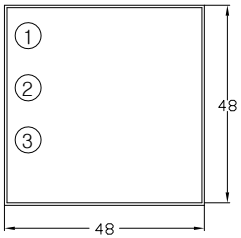	TYPE-SS	□ BLACK ■ WHITE	■ BLACK □ YELLOW	■ PHENOLIC □ SUS304 □ ALUMINIUM	① AUTO START/STOP AT H.F.O SETT. TANK	1
						② MANUAL	
						③ AUTO START/STOP AT L/S H.F.O SETT. TANK	
						① AUTO START/STOP AT M.G.O SETT. TANK	1
						② MANUAL	
						① AUTO STOP AT M.G.O SERV. TANK	1
						② MANUAL	
						① AUTO START/STOP AT AIR EJECTOR UNIT	2
						② LOCAL	
COLOR TIE	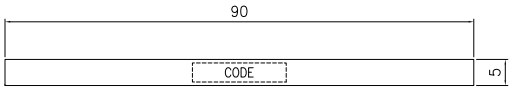 * NOTE. 1. MATERIAL : PHENOLIC 2.0t						

CODE / SPEC.	ES1	ES2		CT	CT1	CT2	LFF	PT1	PT2
GROUND COLOR	RED	RED		YELLOW	YELLOW	YELLOW	GRAY	BLACK	BLACK
LETTER COLOR	WHITE	WHITE		BLACK	BLACK	BLACK	BLACK	WHITE	WHITE
Q'TY	3	10			3				

PROJECT No. S5130		TITLE	NAME PLATE MODEL LIST (FREE-STYLE)
	HME	SHEET No.	G16

NAME PLATE

NO.	TYPE	FEEDER DESCRIPTION: FEED CIRCUIT NO. / CABLE TYPE	FRAME /RATING	FEEDER NAME	Q'TY	EM'CY & PREF. TRIP / CABLE ENTRANCE
01	MB			NO.1 GROUP STARTER PANEL	2	
02	2B	P2001 / T50	250/175	NO.1 MAIN L.O PUMP	1	ES2 / L
03	2B	P2101,04 / T50x2	250/200	NO.1 L.T C.F.W PUMP	1	/ L
04	2B	P2111 / T10	125/50	NO.1 M/E J.W PUMP	1	/ L
05	2B	P2121 / T2	125/15	M/E J.W PRE-HEATER CIRC. PUMP	1	/ L
06	2B	P2131 / T2	125/15	M/E AIR COOLER CLEANING PUMP	1	/ L
07	2B	P2211 / T10	125/50	NO.1 E/R SUPPLY FAN	1	ES1 + CT1 / U
08	2B	P2301,02 / T70x2	400/400	NO.1 FIRE, BILGE & G/S PUMP	1	/ L
09	2B	P2331 / T50	250/150	SCRUBBER C.S.W PUMP FOR I.G.G	1	/ L
10	2B	P2401,02 / T16x2	125/125 (DISCON.)	NO.1 MAIN AIR COMPRESSOR	1	/ U
11	2B	P2411 / T4	125/30	H.F.O TRANS. PUMP	1	ES2 / L
12	2B	P2501 / T10	125/50	NO.1 AUX. BOILER FEED WATER PUMP	1	/ L
13	2B	P2511 / T2	125/20	NO.1 COMP. BOILER FEED WATER PUMP	1	/ L
14	2B	P2521 / T2	125/15	NO.1 DECK WATER SEAL PUMP	1	/ L
15	2B	P2601 / T2	125/15	NO.1 S/T L.O PUMP	1	ES2 / L
16						
17						
18						
19	2B	P4303 /		NO.2 E/R SUPPLY/EXH. FAN	1	/ U
20	PA			LEAD/FOLLOW CONTROL SWITCH	1	

(OMITTED PAGE : G17)

* NOTE
1. CABLE ENTRANCE
- L : LOWER, U : UPPER

0	1	2	3	4	5
6	7	8	9	10	11

PROJECT No.	S5130	TITLE	NAME PLATE LIST (NO.1 GROUP STARTER PANEL)
HME		SHEET No.	G18

NAME PLATE

NO.	TYPE	FEEDER DESCRIPTION			Q'TY	EM'CY & PREF. TRIP
		FEED CIRCUIT NO. / CABLE TYPE	FRAME /RATING	FEEDER NAME		CABLE ENTRANCE
01	MB			NO.2 GROUP STARTER PANEL	2	
02	2B	P2701 / T50	250/175	NO.2 MAIN L.O PUMP	1	ES2 / L
03	2B	P2721 / T2	125/15	NO.2 S/T L.O PUMP	1	ES2 / L
04	2B	P2801,05 / T50x2	250/200	NO.2 L.T C.F.W PUMP	1	/ L
05	2B	P2803 / T10	125/50	NO.2 M/E J.W PUMP	1	/ L
06	2B	P2811,12 / T70x2	400/400	NO.2 FIRE, BILGE & G/S PUMP	1	/ L
07	2B	P2911 / T10	125/50	NO.3 E/R SUPPLY/EXH. FAN	1	ES1 + CT1 / U
08	2B	P2912 / T10	125/50	NO.4 E/R SUPPLY FAN	1	ES1 + CT1 / U
09	2B	P3001 / T35	125/100	NO.2 MAIN AIR COMPRESSOR	1	/ L
10	2B	P3101 / T10	125/50	NO.2 AUX. BOILER FEED WATER PUMP	1	/ U

NO.	TYPE	FEEDER DESCRIPTION			Q'TY	EM'CY & PREF. TRIP
		FEED CIRCUIT NO. / CABLE TYPE	FRAME /RATING	FEEDER NAME		CABLE ENTRANCE
11	2B	P3111 / T2	125/20	NO.2 COMP. BOILER FEED WATER PUMP	1	/ L
12	2B	P3121 / T2	125/15	NO.2 DECK WATER SEAL PUMP	1	/ L
13	2B	P3201 / T4	125/30	M.G.O TRANS. PUMP	1	ES2 / L
14	2B	P3221 / T2	125/15	M.G.O SHIFTING PUMP	1	ES2 / L
15						
16						
17						
18						
19						
20						

* NOTE
1. CABLE ENTRANCE
- L : LOWER, U : UPPER

0	1	2	3	4	5
6	7	8	9	10	11

PROJECT No.	S5130	TITLE	NAME PLATE LIST (NO.2 GROUP STARTER PANEL)
	HME	SHEET No.	G19

NAME PLATE

NO.	TYPE	NAME DESCRIPTION NAME P1	P2	P3	Q'TY	SYMBOL
01	CS3	MODE			1	SS2
		①	②	③		
02	CS3	MODE			4	SS4~5
		①		②		
03	CS2	MODE			2	SS1,SS3
		LOCAL		AUTO		
04	CS1	SUPPLY/RUN			1	GLF/3CF
05	CS1	EXHAUST/RUN			1	GLR/3CR
06	CS1	EM'CY STOP			1	3-0
07	CS1	OIL PRESS. LOW ALARM			2	RL1,3
08	CS1	AIR TEMP. HIGH ALARM			2	RL2,4
09	CS1	RESET			2	3R1,3R2
10	CS1	LAMPS TEST			2	3LT1,3LT2

NO.	TYPE	NAME DESCRIPTION NAME P1	P2	P3	Q'TY	SYMBOL
11	CS1	BWTS READY			2	YL1
12	CS3	BWTS MODE			2	SS6
		NORMAL		BWTS		
13						
14						
15						
16						
17						
18						
19						
20						

0	1	2	3	4	5						
6	7	8	9	10	11						

PROJECT No.	S5130	TITLE	NAME PLATE LIST (LAMP & SWITCH)
	HME	SHEET No.	G20

NO.1 GROUP STARTER PANEL			MOTOR		ISOLATING MEANS			CABLE		CONTROL						INSTRUMENTS & OTHER					REF. DRAWINGS
			RATING AC440V 60HZ		TYPE UCB (FRAME/CUR.) H (A)	CONNECTION	ACCESSORY	LINE	LOAD	START METHOD	CONTROL METHOD	U V FEATURE SEQUENTIAL START DELAY TIME (SEC)	REMOTE CONTROL	EM'CY STOP PREF. TRIP	SPACE HEATER (ELEMENT:EH) (WINDING:WH)	AMMETER		RUNNING HOUR METER	AUTO TRANS-FORMER	INSULATION MONITOR (SBAG-202)	OUTLINE (PAGE) SCHEMATIC DIAGRAM (PAGE)
NO.	FEEDER No.	FEEDER NAME	kW	A				CIR No. DESCRIPTION	DESCRIP-TION							TYPE D-200	CT KBJ-03 (5VA)	TYPE H57 (AC220V)			
1	P2001	NO.1 MAIN L.O PUMP	75	119	250/175	FDC		MAIN BUS	T50	DOL	ACVP	UVR (5 sec)	1	ES2	WH(AC19V,718VA)	0~200A	200/5A (15VA)	1			SD101A/B
2	P2101,04	NO.1 L.T C.F.W PUMP	90	144	250/200	FDC		MAIN BUS	T50x2	Y-D	ACVP	UVR (10 sec)	1		WH(AC19V,806VA)	0~200A	200/5A (15VA)	1			SD102A/B
3	P2111	NO.1 M/E J.W PUMP	22	35.6	125/50	FDC		MAIN BUS	T10	DOL	ACVP	UVR (10 sec)	1		WH(AC27V,422VA)	0~50A	100/5A (2 TURNS)	1			SD103
4	P2121	M/E J.W PRE-HEATER CIRC. PUMP	1.5	2.81	125/15	FDC		MAIN BUS	T2	DOL	NA	UVR (10 sec)	1			0~5A		1			SD104
5	P2131	M/E AIR COOLER CLEANING PUMP	1.5	2.81	125/15	FDC		MAIN BUS	T2	DOL	NA	UVP	1			0~5A		1			SD105
6	P2211	NO.1 E/R SUPPLY FAN	15	27.5	125/50	FDC		MAIN BUS	T10	DOL	NA	UVR (20 sec)	1	ES1+CT	WH(AC33V,150VA)	0~50A	100/5A (2 TURNS)	1			SD106A/B
7	P2301,02	NO.1 FIRE, BILGE & G/S PUMP	132	215	400/400	FDC		MAIN BUS	T70x2	Y-D	NA	UVR (20 sec)	1,3,4,5,9		WH(AC15V,966VA)	0~400A	400/5A (15VA)	1			SD107A/B
8	P2331	SCRUBBER C.S.W PUMP FOR I.G.G	65	90.8	250/150	FDC		MAIN BUS	T50	DOL	NA	UVP	1,9		WH(AC19V,660VA)	0~150A	150/5A	1			SD108A/B
9	P2401,02	NO.1 MAIN AIR COMPRESSOR	35	59	125/125 (DISCON.)	FDC		P4010 (T35)	T16x2	Y-D	ASS	UVP	1		EH(AC220V,80W)	0~100A	100/5A	1			SD109A/B
10	P2411	H.F.O TRANS. PUMP	8.7	15.2	125/30	FDC		MAIN BUS	T4	DOL	ASS	UVP	1	ES2	WH(AC15V,100VA)	0~30A		1			SD110
11	P2501	NO.1 AUX. BOILER FEED WATER PUMP	18.5	29.7	125/50	FDC		MAIN BUS	T10	DOL	ACVP	UVR (15 sec)	1,9		WH(AC25V,298VA)	0~50A	100/5A (2 TURNS)	1			SD111
12	P2511	NO.1 COMP. BOILER FEED WATER PUMP	7.5	12.3	125/20	FDC		MAIN BUS	T2	DOL	ACVP	UVR (15 sec)	1,9		WH(AC28V,168VA)	0~20A		1			SD112
13	P2521	NO.1 DECK WATER SEAL PUMP	1.5	2.81	125/15	FDC		MAIN BUS	T2	DOL	ACVP	UVR (15 sec)	1,9			0~5A		1			SD113A/B
14	P2601	NO.1 S/T L.O PUMP	0.75	2.1	125/15	FDC		MAIN BUS	T2	DOL	ACVP	UVR (5 sec)	1	ES2		0~3A		1			SD114
15																					
16																					
17																					
18																					
19																					
20																					

1. STARTING METHOD AND CONTROL METHOD
- DOL : DIRECT ON LINE STARTING
- Y-D : STAR DELTA STARTING
- ATR : AUTO TRANSFORMER STARTING
- REV : DIRECT ON LINE STARTING(REVERSE)
- UVR : UNDER VOLTAGE RELEASE STARTING
- UVP : UNDER VOLTAGE PROTECTION STARTING
- ACP : AUTO CHANGE BY LOW PRESSURE
- ACVP : AUTO CHANGE BY LOW VOLTAGE & LOW PRESSURE
- ASS : AUTO START/STOP
- NA : NON AUTO
- (A-M) : AUTO/MANUAL SELECT SIWTCH

2. EM'CY STOP
- ES1
- ES2
- LFF

3. CO2 TRIP
- CT
- CT1
- CT2

4. PREF. TRIP
- PT1
- PT2

5. REMOTE CONTROL
1. M/S : MACHINE SIDE
2. E.C.C : ENGINE CONTROL CONSOLE
3. W.C.C : W/H CONTROL CONSOLE
4. C.C.C : CARGO CONTROL CONSOLE
5. F.C.S : FIRE CONTROL STATION
6. AMS : ALARM MONITORING SYSTEM
7. STOP : REMOTE STOP ONLY
8. B.C.C : BALLAST CONTROL CONSOLE
9. OTHERS

6. SPACE HEATER
- EH : ELEMENT HEATING TYPE
- WH : WINDING HEATING TYPE

0	1	2	3	4	5
6	7	8	9	10	11

PROJECT No.	S5130	TITLE	SPECIFICATION LIST (NO.1 GROUP STARTER PANEL)
HME		SHEET No.	G21

NO.2 GROUP STARTER PANEL			MOTOR		ISOLATING MEANS			CABLE		CONTROL						INSTRUMENTS & OTHER					REF. DRAWINGS
			RATING AC440V 60HZ		TYPE UCB (FRAME/CUR.) H (A)	CONNECTION	ACCESSORY	LINE	LOAD	START METHOD	CONTROL METHOD	U V FEATURE SEQUENTIAL START DELAY TIME (SEC)	REMOTE CONTROL	EM'CY STOP PREF. TRIP	SPACE HEATER (ELEMENT:EH) (WINDING:WH)	AMMETER		RUNNING HOUR METER	AUTO TRANS-FORMER	INSULATION MONITOR (SBAG-202)	OUTLINE (PAGE) SCHEMATIC DIAGRAM (PAGE)
NO.	FEEDER No.	FEEDER NAME	kW	A				CIR No. DESCRIPTION	DESCRIP-TION							TYPE D-200	CT KBJ-03 (5VA)	TYPE H57 (AC220V)			
1	P2701	NO.2 MAIN L.O PUMP	75	119	250/175	FDC		MAIN BUS	T50	DOL	ACVP	UVR (5 sec)	1	ES2	WH(AC19V,718VA)	0~200A	200/5A (15VA)	1			SD201A/B
2	P2721	NO.2 S/T L.O PUMP	0.75	2.1	125/15	FDC		MAIN BUS	T2	DOL	ACVP	UVR (5 sec)	1	ES2		0~3A		1			SD202
3	P2801,05	NO.2 L.T C.F.W PUMP	90	144	250/200	FDC		MAIN BUS	T50x2	Y-D	ACVP	UVR (10 sec)	1		WH(AC19V,806VA)	0~200A	200/5A (15VA)	1			SD203A/B
4	P2803	NO.2 M/E J.W PUMP	22	35.6	100/50	FDC		MAIN BUS	T10	DOL	ACVP	UVR (10 sec)	1		WH(AC27V,422VA)	0~50A	100/5A (2 TURNS)	1			SD204
5	P2811,12	NO.2 FIRE, BILGE & G/S PUMP	132	215	400/400	FDC		MAIN BUS	T70x2	Y-D	NA	UVR (20 sec)	1,3,4,5,9		WH(AC15V,966VA)	0~400A	400/5A (15VA)	1			SD205A/B
6	P2911	NO.3 E/R SUPPLY/EXH. FAN	15	27.5	100/50	FDC		MAIN BUS	T10	DOL	REV	UVR (20 sec)	1	ES1+CT	WH(AC33V,150VA)	0~50A	100/5A (2 TURNS)	1			SD206A/B
7	P2912	NO.4 E/R SUPPLY FAN	15	27.5	100/50	FDC		MAIN BUS	T10	DOL	NA	UVR (20 sec)	1	ES1+CT	WH(AC33V,150VA)	0~50A	100/5A (2 TURNS)	1			SD207
8	P3001	NO.2 MAIN AIR COMPRESSOR	35	59	125/100	FDC		MAIN BUS	T35	DOL	ASS	UVP	1		EH(AC220V,80W)	0~100A	100/5A	1			SD208A/B
9	P3101	NO.2 AUX. BOILER FEED WATER PUMP	18.5	29.7	100/50	FDC		MAIN BUS	T10	DOL	ACVP	UVR (15 sec)	1,9		WH(AC25V,298VA)	0~50A	100/5A (2 TURNS)	1			SD209
10	P3111	NO.2 COMP. BOILER FEED WATER PUMP	7.5	12.3	100/20	FDC		MAIN BUS	T2	DOL	ACVP	UVR (15 sec)	1,9		WH(AC28V,168VA)	0~20A		1			SD210
11	P3121	NO.2 DECK WATER SEAL PUMP	1.5	2.81	100/15	FDC		MAIN BUS	T2	DOL	ACVP	UVR (15 sec)	1,9			0~5A		1			SD211A/B
12	P3201	M.G.O TRANS. PUMP	8.7	14.2	100/30	FDC		MAIN BUS	T4	DOL	ASS	UVP	1	ES2	WH(AC15V,100VA)	0~30A		1			SD212
13	P3221	M.G.O SHIFTING PUMP	0.87	1.9	100/15	FDC		MAIN BUS	T2	DOL	ASS	UVP	1	ES2	WH(AC23V,23VA)	0~3A		1			SD-
14																					
15																					
16																					
17																					
18																					
19																					
20																					

1. STARTING METHOD AND CONTROL METHOD
- DOL : DIRECT ON LINE STARTING
- Y-D : STAR DELTA STARTING
- ATR : AUTO TRANSFORMER STARTING
- REV : DIRECT ON LINE STARTING(REVERSE)
- UVR : UNDER VOLTAGE RELEASE STARTING
- UVP : UNDER VOLTAGE PROTECTION STARTING
- ACP : AUTO CHANGE BY LOW PRESSURE
- ACVP : AUTO CHANGE BY LOW VOLTAGE & LOW PRESSURE
- ASS : AUTO START/STOP
- NA : NON AUTO
- (A-M) : AUTO/MANUAL SELECT SIWTCH

2. EM'CY STOP
- ES1
- ES2
- LFF

3. CO2 TRIP
- CT
- CT1
- CT2

4. PREF. TRIP
- PT1
- PT2

5. REMOTE CONTROL
1. M/S : MACHINE SIDE
2. E.C.C : ENGINE CONTROL CONSOLE
3. W.C.C : W/H CONTROL CONSOLE
4. C.C.C : CARGO CONTROL CONSOLE
5. F.C.S : FIRE CONTROL STATION
6. AMS : ALARM MONITORING SYSTEM
7. STOP : REMOTE STOP ONLY
8. B.C.C : BALLAST CONTROL CONSOLE
9. OTHERS

6. SPACE HEATER
- EH : ELEMENT HEATING TYPE
- WH : WINDING HEATING TYPE

0	1	2	3	4	5						
6	7	8	9	10	11						

PROJECT No.	S5130	TITLE	SPECIFICATION LIST (NO.2 GROUP STARTER PANEL)
	HME	SHEET No.	G22

NO.1 GROUP STARTER PANEL

| MANUFACTURER | | | HYUNDAI | | | | | | | | | | | | | | | | | | | | | | | | | HME | OBOK | | | | SB-FUSE | | | | | YONG SUNG | | | | | | | | | | | | | | | | | | HYUNDAI | | | | | | | | | | | | | | | | | | |

NO.2 GROUP STARTER PANEL

MANUFACTURER			HYUNDAI																									HME	OBOK			SB-FUSE					YONG SUNG																			HYUNDAI				KACON		OMRON			LUXCO	HYUNDAI		LUXCO
			MAGNETIC CONTACTOR																							THERMAL OVER CURRENT RELAY (2P)		STARTER MODULE	CONTROL POWER TRANSFORMER(1ø)			FUSE					INDICATING LAMP				ILLUMINATED PUSH BUTTON SWITCH				PUSH BUTTON SWITCH			CONTROL SWITCH							AUX.RELAY			TIMING RELAY							AUX. BLOCK		W/H CONTROLLER
			AC220V				AC440V																									TYPE SB-C1																																				
																													440/220V/22V	440/220V/22V	440/220V/22V	440/()V																																			
																													FRC-100	FRC-200	FRC-300	FRC-( )																																			
CIR No.	CIRCUIT NAME	RATING (A)	UMC 9	UMC 12	UMC 18	UMC 25	UMC 9	UMC 12	UMC 18	UMC 25	UMC 32	UMC 40	UMC 50	UMC 65	UMC 75	UMC 85	UMC 100	UMC 115	UMC 130	UMC 150	UMC 185	UMC 225	UMC 265	TYPE UTH ( )K	RANGE (SETTING) A	HMC -( )				FC 1 ()A (x2)	FC 2 ()A (x2)	FL 1 ()A (x1)	FH 1 ()A (x2)	FH 2 ()A (x1)	YSPL2-AL24W	YSPL2-AL24R	YSPL2-024AG		YSNPBL2-AL24G	YSNPBL2-AL22G	YSPL2-AL24W		YSAP12-22R	YSAP12-22B	YSSP322-11	YSAR2-322LB	YSAR2-222LB	YSAR2-322KB	YSAR2-222KB	YSC3xxx-64M0B	YSC2101-69M0B	UMX22	UMX31	UMX22	UMX31	HR705-4PL	H3BA-N8H	H3BA-N	GTN-YD	UAB 31(3a+1b)	UAB 22(2a+2b)	W/H (GTN-WH)
P2701	NO.2 MAIN L.O PUMP	119										1							1				150	90~150 (119)	COASH	1			*T8	3	3	1	3																				2									1	1
P2721	NO.2 S/T L.O PUMP	2.1					1																12	2~3 (2.1)	COASN	1				3	3	1																					1										
P2801,05	NO.2 L.T C.F.W PUMP	144												1			1		2				150	111~185 (144)	COASH	1			*T10	3	3	1	3																				2							1		2	1
P2803	NO.2 M/E J.W PUMP	35.6				1						1											65	28~40 (35.6)	COASH	1			*T7	3	3	1	3																				1									1	1
P2811,12	NO.2 FIRE, BILGE & G/S PUMP	215														1		1			2			265	159~265 (215)	CONSH		1		*T9	3	3	3	3																				2			1		1		1		3	1
P2911	NO.3 E/R SUPPLY/EXH. FAN	27.5	1								2												32	22~32 (27.5)	CTNSH	1			*T4	3	3	3	1																				2								4	1	1
P2912	NO.4 E/R SUPPLY FAN	27.5	1								1												32	22~32 (27.5)	CONSH	1			*T4	3	3	1	1																				1									1	1
P3001	NO.2 MAIN AIR COMPRESSOR	59	1													1							100	52~75 (59)	CONSH			1	*T1	3	3	3	1	1		2							1	1								1			5		8				1	1	
P3101	NO.2 AUX. BOILER FEED WATER PUMP	29.7			1							1											65	28~40 (29.7)	COASH	1			*T6	3	3	1	1																				1									2	1
P3111	**NO.2 COMP. BOILER FEED WATER PUMP**	12.3	1						1														32	12~18 (12.3)	COASH	1			*T5	3	3	1	1																				1									2	1
P3121	NO.2 DECK WATER SEAL PUMP	2.81					1																12	2.8~4.2 (2.81)	COASN	1				3	3	1																					1			1		1				1	
P3201	M.G.O TRANS. PUMP	14.2	1							1													32	12~18 (14.2)	CONSH	1			*T3	3	3	1	1													1							1								1	1	1
P3221	M.G.O SHIFTING PUMP	1.9	1				1																12	1.5~2.1 (1.9)	CONSH	1			*T2	3	3	1	1													1							1									1	1

1. CONTROL TRANSFORMER FOR HEATER
*T1 : FRC-100 440/220V (1EA)
*T2 : FRC-50 440/23V (1EA)
*T3 : FRC-100 440/15V (1EA)
*T4 : FRC-150 440/33V (1EA)
*T5 : FRC-200 440/28V (1EA)
*T6 : FRC-300 440/25V (1EA)
*T7 : FRC-500 440/27V (1EA)
*T8 : FRC-750 440/19V (1EA)
*T9 : FRC-1000 440/15V (1EA)
*T10: FRC-1000 440/19V (1EA)

0	1	2	3	4	5	
6	7	8	9	10	11	

PROJECT No.	TITLE	PART LIST (NO.2 GROUP STARTER PANEL)
S5130		
HME	SHEET No.	G24

NO.1 GROUP STARTER PANEL

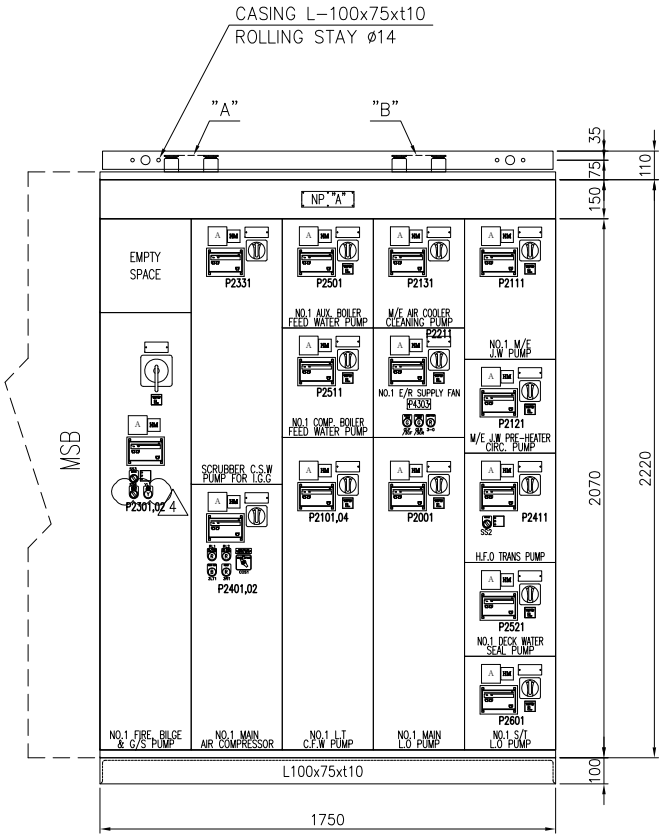

FRONT VIEW

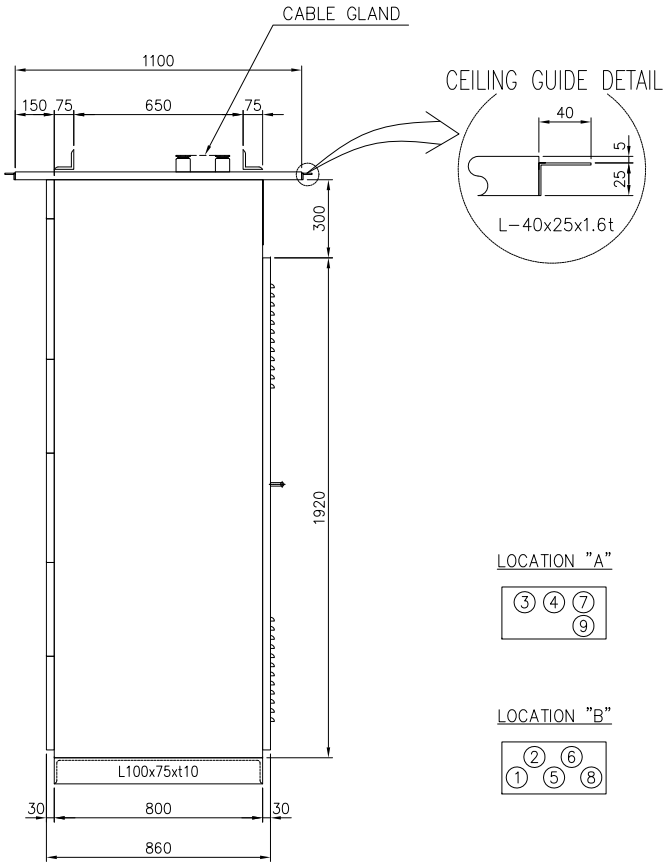

SIDE VIEW

FEED NO.	NAME
P2001	NO.1 MAIN L.O PUMP
P2101,04	NO.1 L.T C.F.W PUMP
P2111	NO.1 M/E J.W PUMP
P2121	M/E J.W PRE-HEATER CIRC. PUMP
P2131	M/E AIR COOLER CLEANING PUMP
P2211	NO.1 E/R SUPPLY FAN
P2301,02	NO.1 FIRE, BILGE & G/S PUMP
P2331	SCRUBBER C.S.W PUMP FOR I.G.G
P2401,02	NO.1 MAIN AIR COMPRESSOR
P2411	H.F.O TRANS. PUMP
P2501	NO.1 AUX. BOILER FEED WATER PUMP
P2511	NO.1 COMP. BOILER FEED WATER PUMP
P2521	NO.1 DECK WATER SEAL PUMP
P2601	NO.1 S/T L.O PUMP

LOCATION "A"

LOCATION "B"

NO.1 GROUP STARTER PANEL				
NO.	CIRCUIT	CABLE	GLAND	LOCATION
1	P2211	T10	25A	"B"
2	P2212	MC12	25B	"B"
3	P2325	MC19	25C	"A"
4	P2333	MC27	25C	"A"
5	P2504	MC7	15C	"B"
6	P2514	MC7	15C	"B"
7	P4010	T35	30C	"A"
8	P4303	MC7	15C	"B"
9	P2327	MC7	15C	"A"
10				
11				

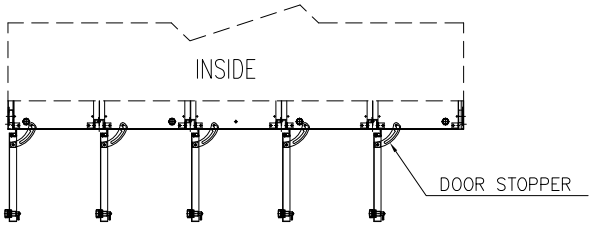

PROTECTION GRADE	IP 22
MATERIAL	STEEL
PAINT COLOR	MUNSELL NO. 7.5BG 7/2

*NOTE
1. DOOR STOPPER IS INSTALLED EACH DOOR OF STARTER.

0	1	2	3	4	5
6	7	8	9	10	11

PROJECT No.	S5130	TITLE	OUTLINE VIEW (NO.1 GROUP STARTER PANEL)
	HME	SHEET No.	L01

NO.1 GROUP STARTER PANEL

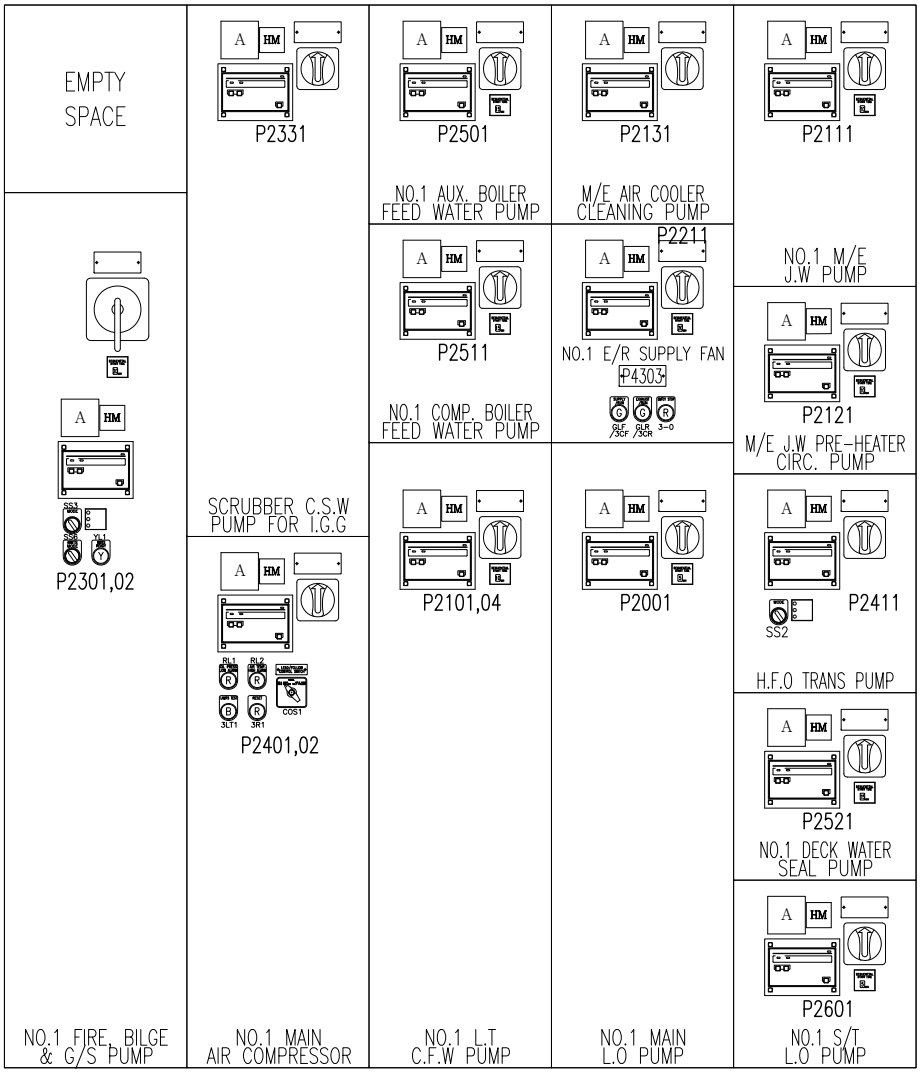

PROJECT No.	TITLE	
S5130		OUTLINE VIEW (NO.1 GROUP STARTER PANEL)
HME	SHEET No.	L02

0	1	2	3	4	5
6	7	8	9	10	11

NO.2 GROUP STARTER PANEL

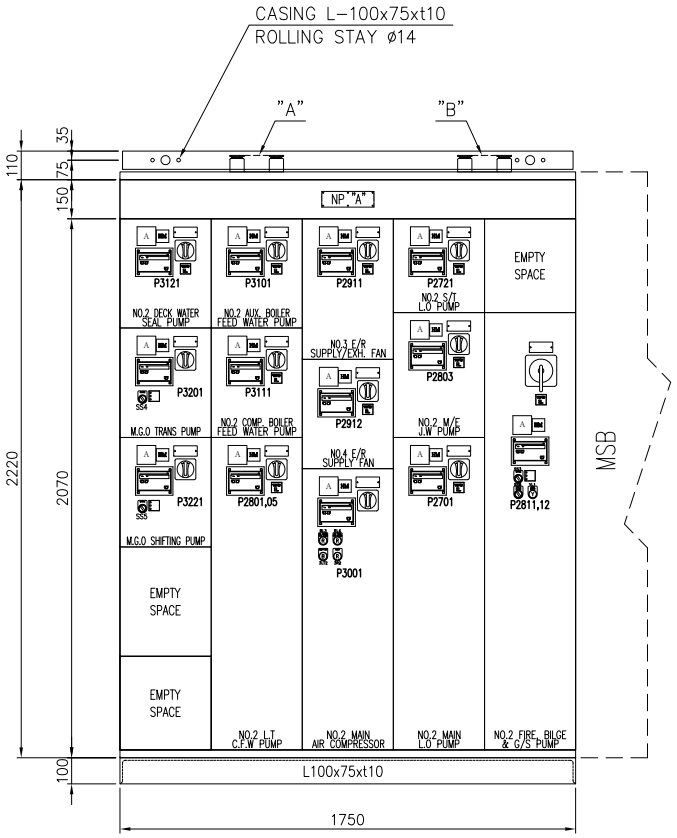

FRONT VIEW

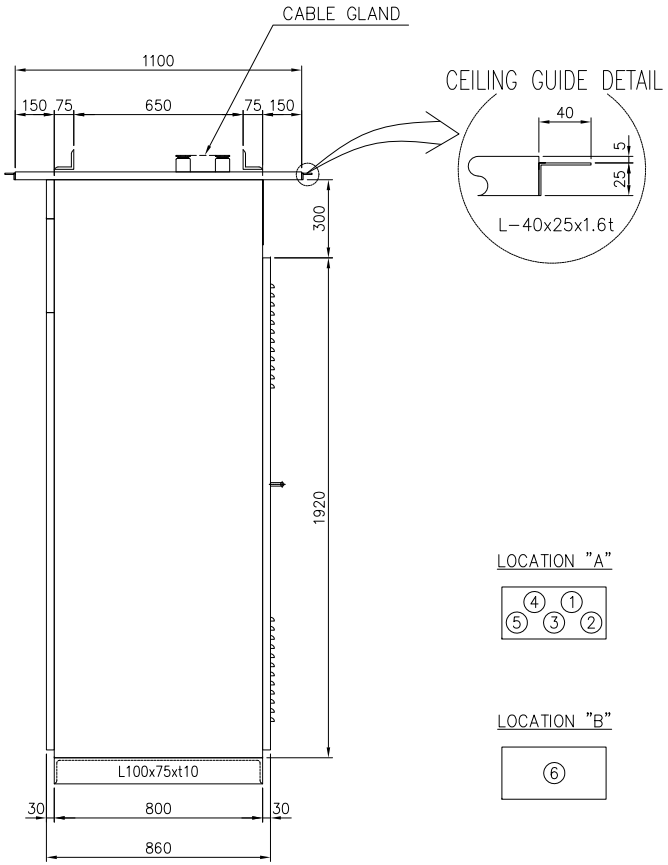

SIDE VIEW

FEED NO.	NAME
P2701	NO.2 MAIN L.O PUMP
P2801	NO.2 L.T C.F.W PUMP
P2811	NO.2 M/E J.W PUMP
P2821,22	FIRE & BILGE PUMP
P2831	SCRUBBER C.S.W PUMP FOR I.G.G
P2901	NO.2 F.O SUPPLY PUMP
P2911	NO.2 F.O CIRC. PUMP
P2921	NO.4 E/R SUPPLY FAN
P2931	NO.3 E/R SUPPLY/EXH. FAN
P3001	NO.2 MAIN AIR COMPRESSOR
P3101	NO.2 FEED WATER PUMP FOR AUX. BOILER
P3111	NO.2 FEED WATER PUMP FOR COMP. BOILER
P3121	NO.2 DECK WATER SEAL PUMP
P3201	M.G.O TRANS. PUMP
P3211	NO.2 G/E EM'CY M.G.O PUMP
P3221	M.G.O SHIFTING PUMP

LOCATION "A"

LOCATION "B"

NO.2 GROUP STARTER PANEL				
NO.	CIRCUIT	CABLE	GLAND	LOCATION
1	P2911	T10	25A	"A"
2	P2912	T10	25A	"A"
3	P2913	MC12	20C	"A"
4	P3103	MC7	15C	"A"
5	P3113	MC7	15C	"A"
6	P2821	MC7	15C	"B"
7				
8				
9				
10				
11				

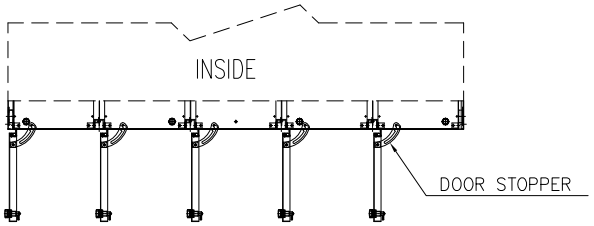

PROTECTION GRADE	IP 22
MATERIAL	STEEL
PAINT COLOR	MUNSELL NO. 7.5BG 7/2

*NOTE
1. DOOR STOPPER IS INSTALLED EACH DOOR OF STARTER.

0	1	2	3	4	5
6	7	8	9	10	11

PROJECT No.	S5130	TITLE	OUTLINE VIEW (NO.2 GROUP STARTER PANEL)
	HME	SHEET No.	L03

NO.2 GROUP STARTER PANEL

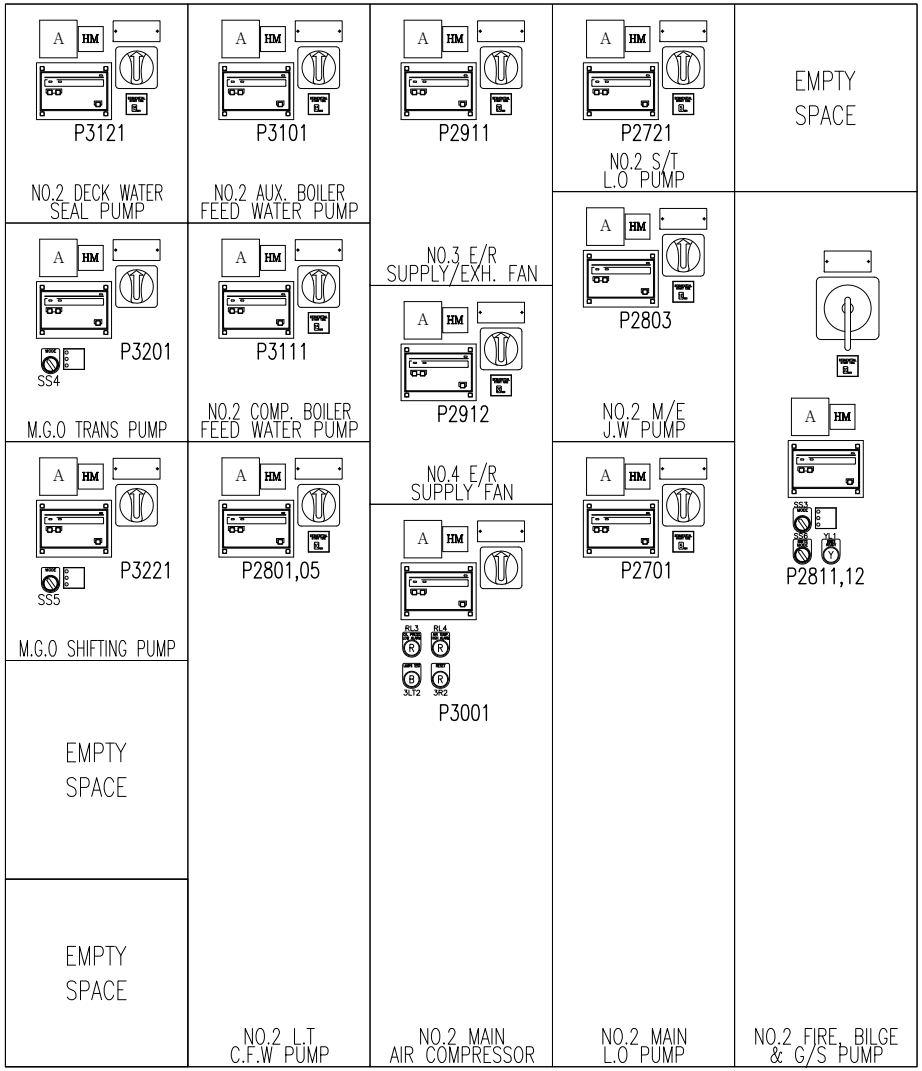

PROJECT No.	TITLE	
S5130		OUTLINE VIEW (NO.2 GROUP STARTER PANEL)
HME	SHEET No.	L04

0	1	2	3	4	5
6	7	8	9	10	11

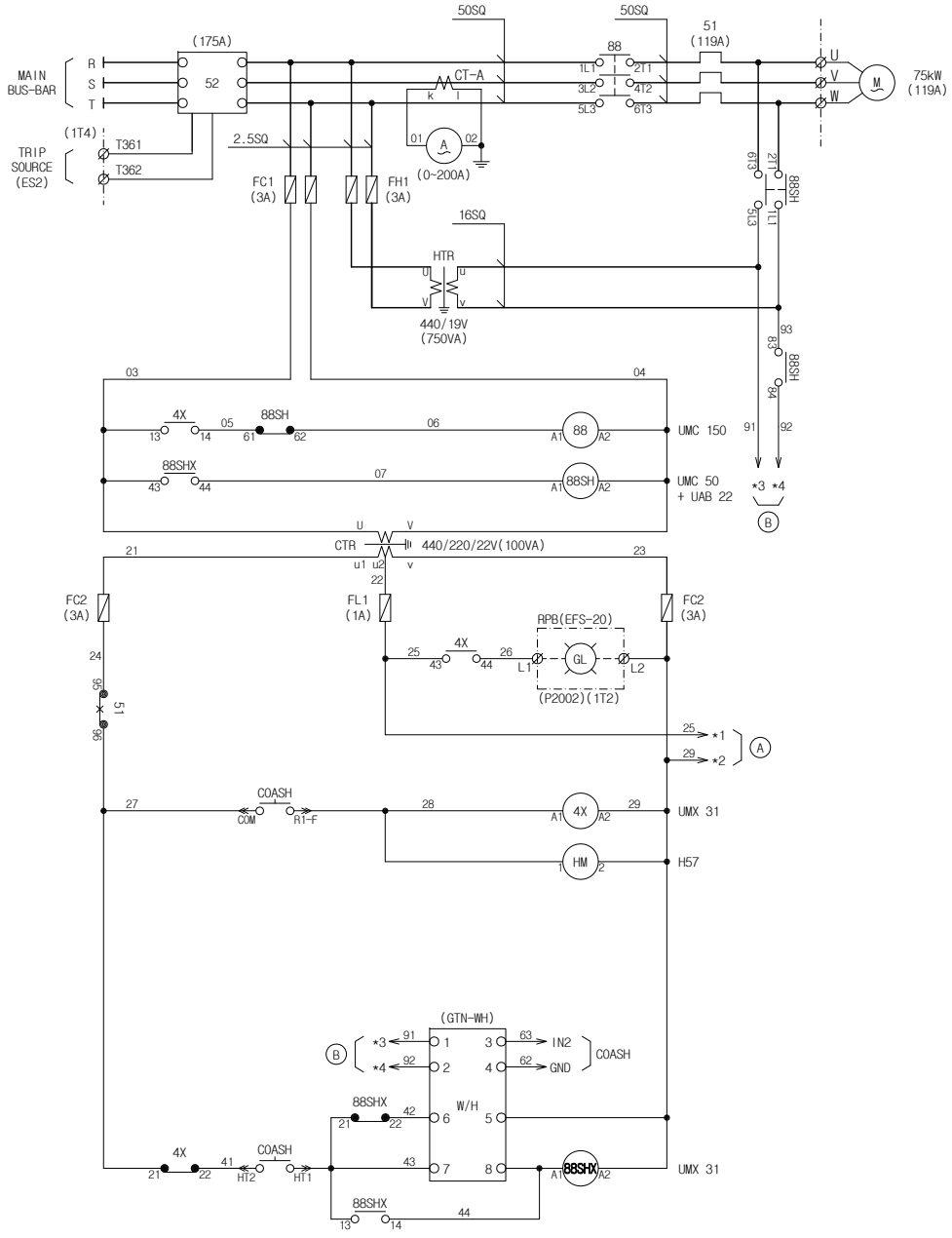

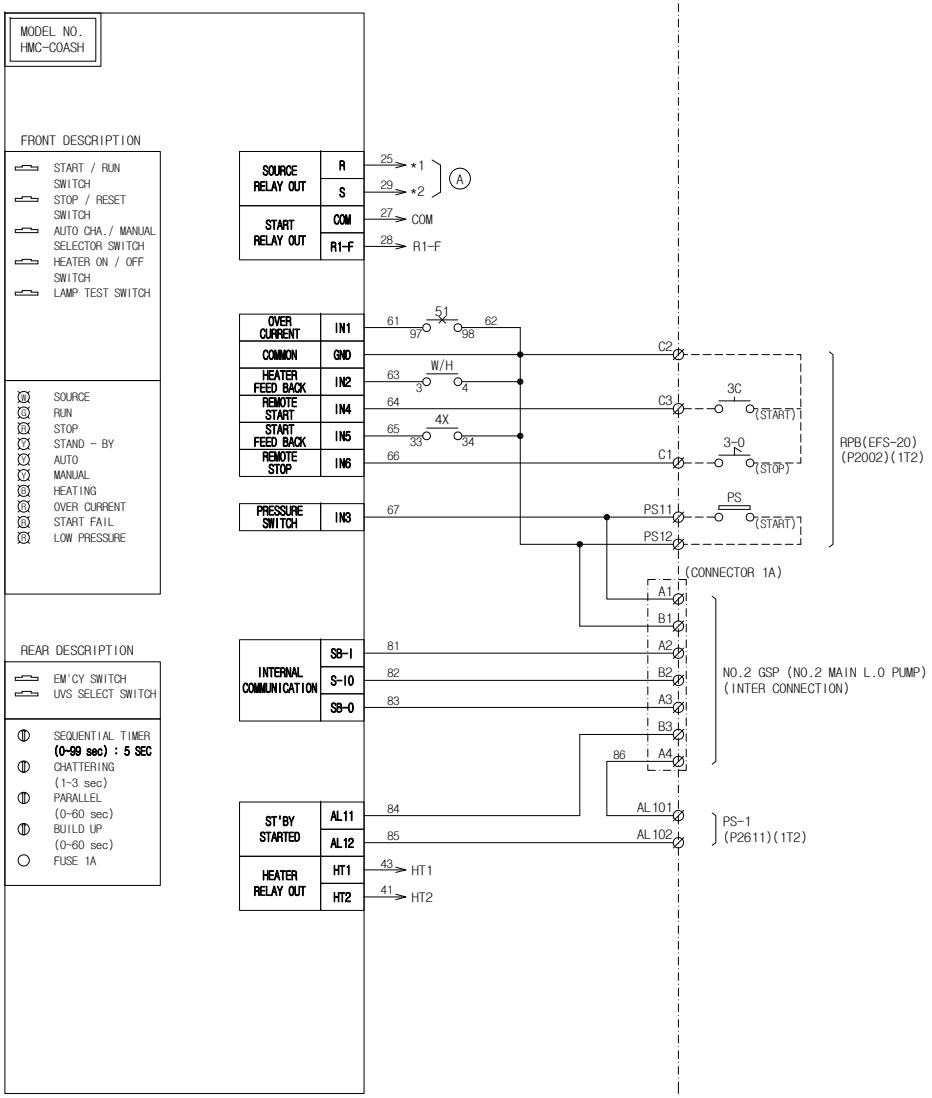

PROJECT No.	TITLE	NO.1 MAIN L.O PUMP (P2001)
S5130	SHEET No.	SD101A

HME

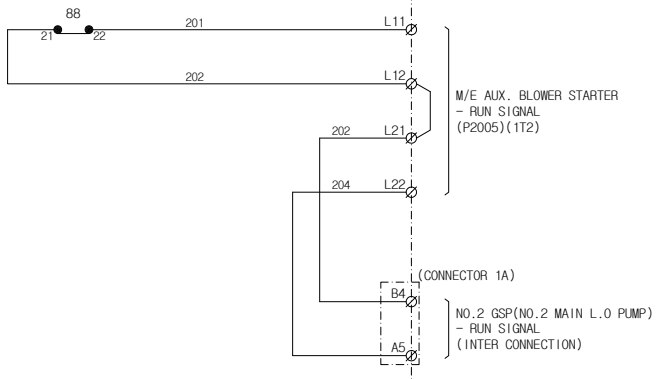

0	1	2	3	4	5						
6	7	8	9	10	11						

PROJECT No.	S5130	TITLE	NO.1 MAIN L.O PUMP (P2001)
HME		SHEET No.	SD101B

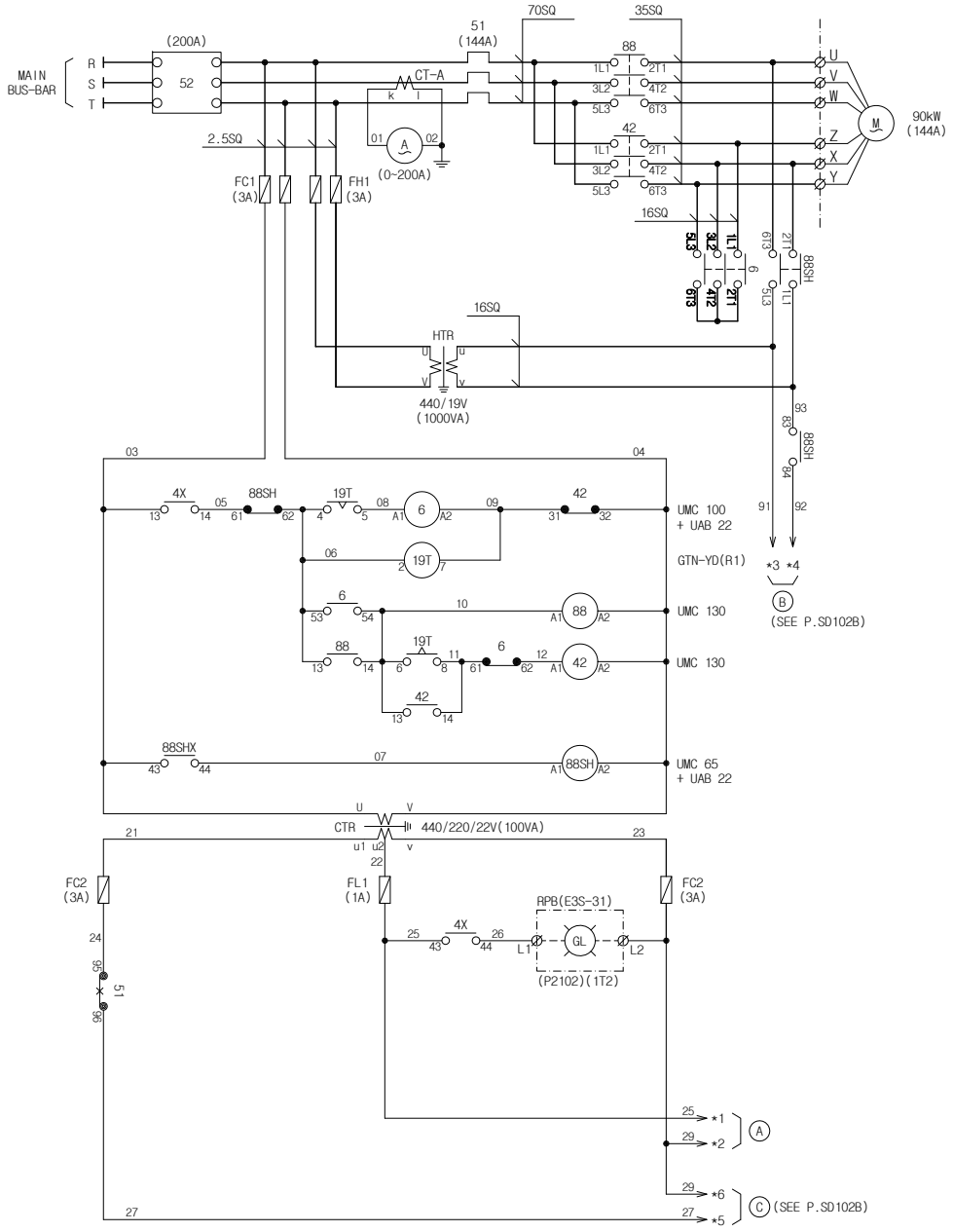

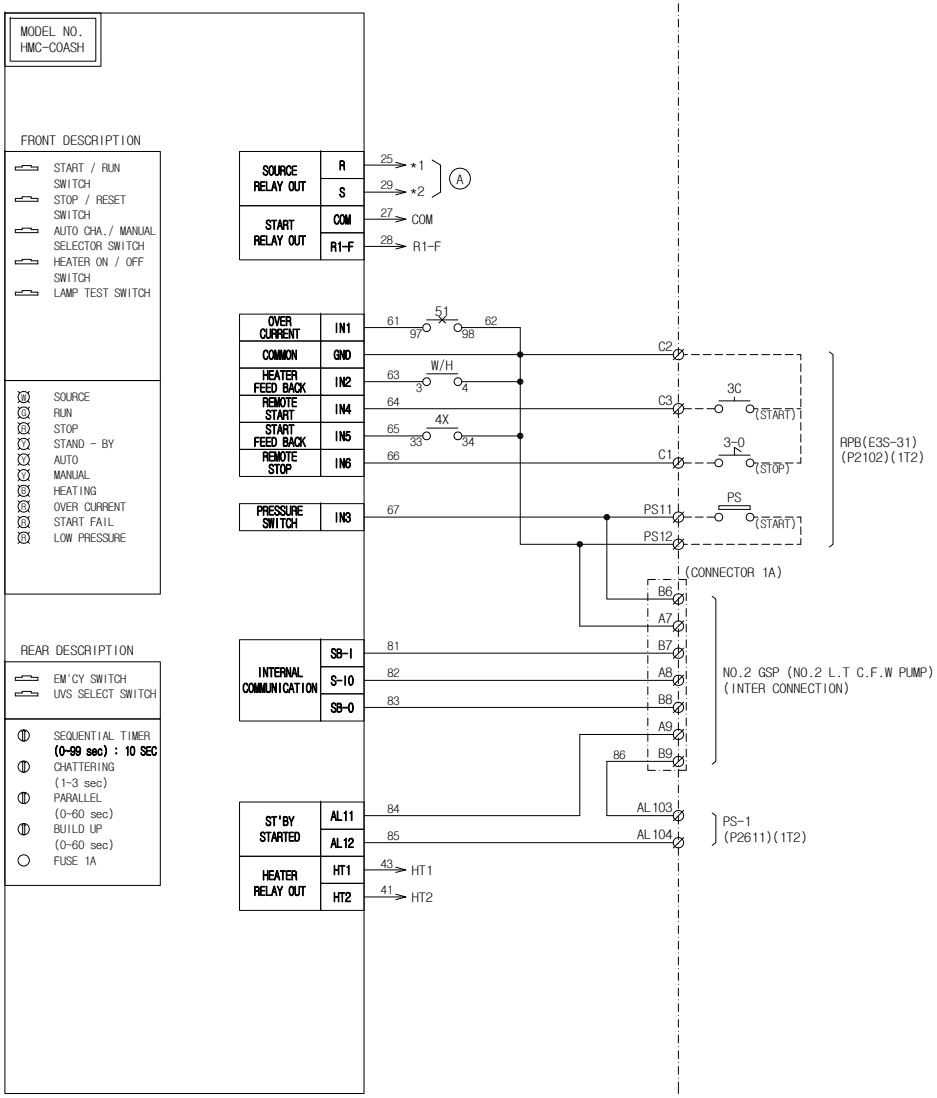

PROJECT No.	TITLE	
S5130	TITLE	NO.1 L.T C.F.W PUMP (P2101,04)
HME	SHEET No.	SD102A

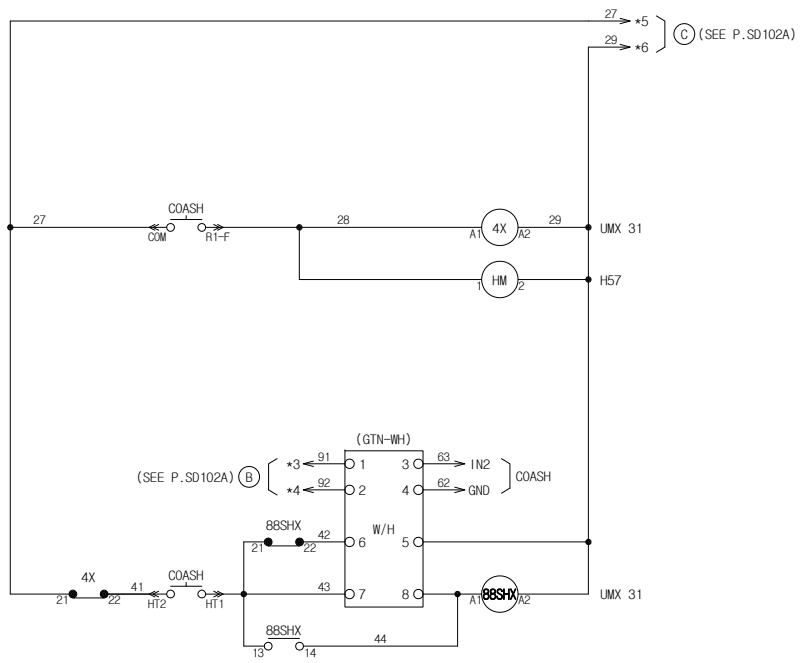

PROJECT No.	S5130	TITLE	NO.1 L.T C.F.W PUMP (P2101,04)
	HME	SHEET No.	SD102B

0	1	2	3	4	5
6	7	8	9	10	11

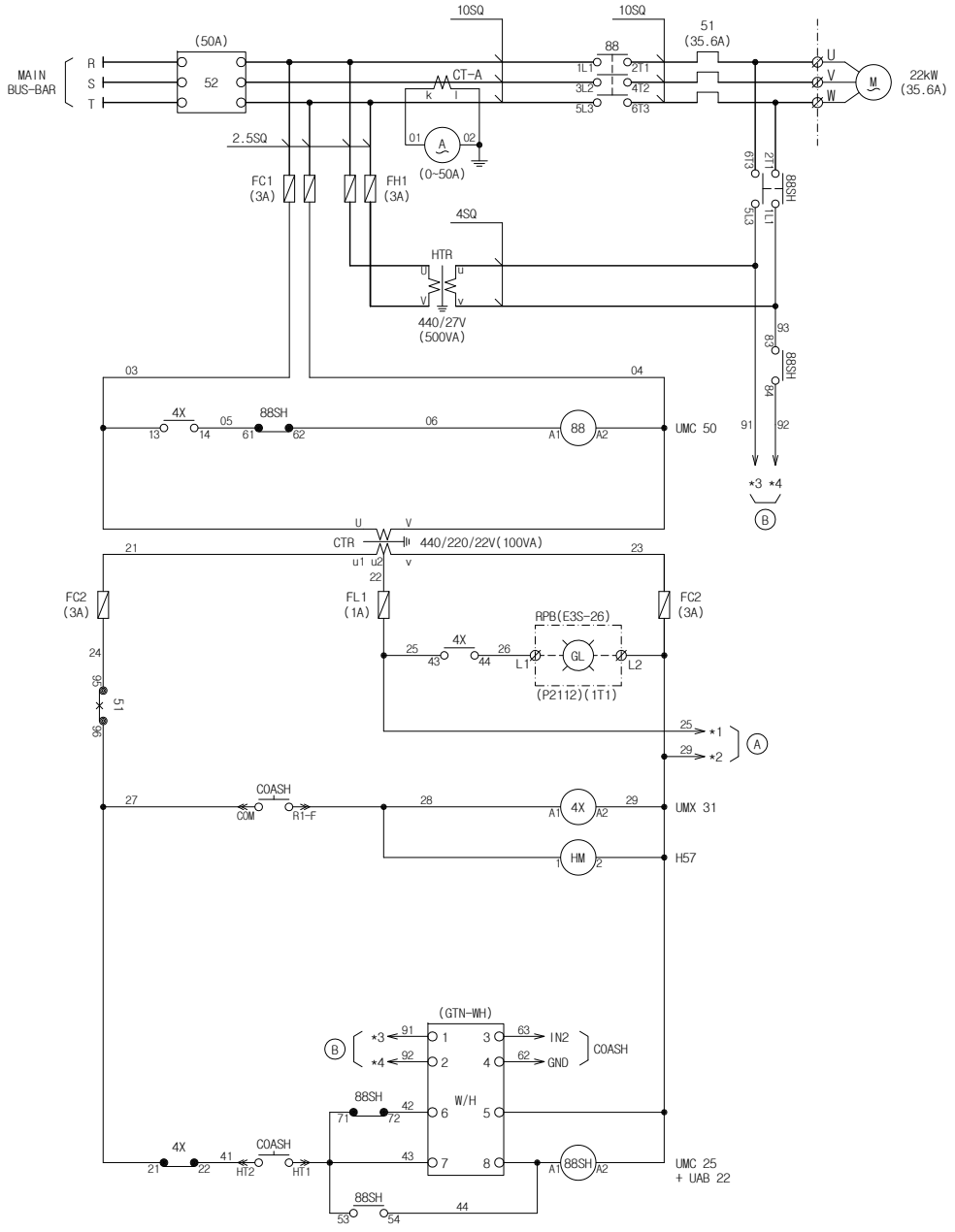

MODEL NO.
HMC-COASH

FRONT DESCRIPTION

- START / RUN SWITCH
- STOP / RESET SWITCH
- AUTO CHA./ MANUAL SELECTOR SWITCH
- HEATER ON / OFF SWITCH
- LAMP TEST SWITCH

- SOURCE
- RUN
- STOP
- STAND - BY
- AUTO
- MANUAL
- HEATING
- OVER CURRENT
- START FAIL
- LOW PRESSURE

REAR DESCRIPTION

- EM'CY SWITCH
- UVS SELECT SWITCH

- SEQUENTIAL TIMER (0-99 sec) : 10 SEC
- CHATTERING (1-3 sec)
- PARALLEL (0-60 sec)
- BUILD UP (0-60 sec)
- FUSE 1A

SOURCE RELAY OUT	R	25	*1
	S	29	*2
START RELAY OUT	COM	27	COM
	R1-F	28	R1-F
OVER CURRENT	IN1	61	51 (97, 98) 62
COMMON	GND		
HEATER FEED BACK	IN2	63	W/H (3, 4)
REMOTE START	IN4	64	
START FEED BACK	IN5	65	4X (33, 34)
REMOTE STOP	IN6	66	
PRESSURE SWITCH	IN3	67	
INTERNAL COMMUNICATION	SB-I	81	
	S-IO	82	
	SB-O	83	
ST'BY STARTED	AL11	84	
	AL12	85	
HEATER RELAY OUT	HT1	43	HT1
	HT2	41	HT2

RPB(E3S-26) (P2112)(1T1): C2, C3 (3C START), C1 (3-0 STOP), PS11, PS12 (PS START)

(CONNECTOR 1A): A11, B11, A12, B12, A13, B13, A14 — NO.2 GSP (NO.2 M/E J.W PUMP) (INTER CONNECTION)

PS-1 (P2611)(1T2): AL105, AL106

PROJECT No.	S5130	TITLE	NO.1 M/E J.W PUMP (P2111)
	HME	SHEET No.	SD103

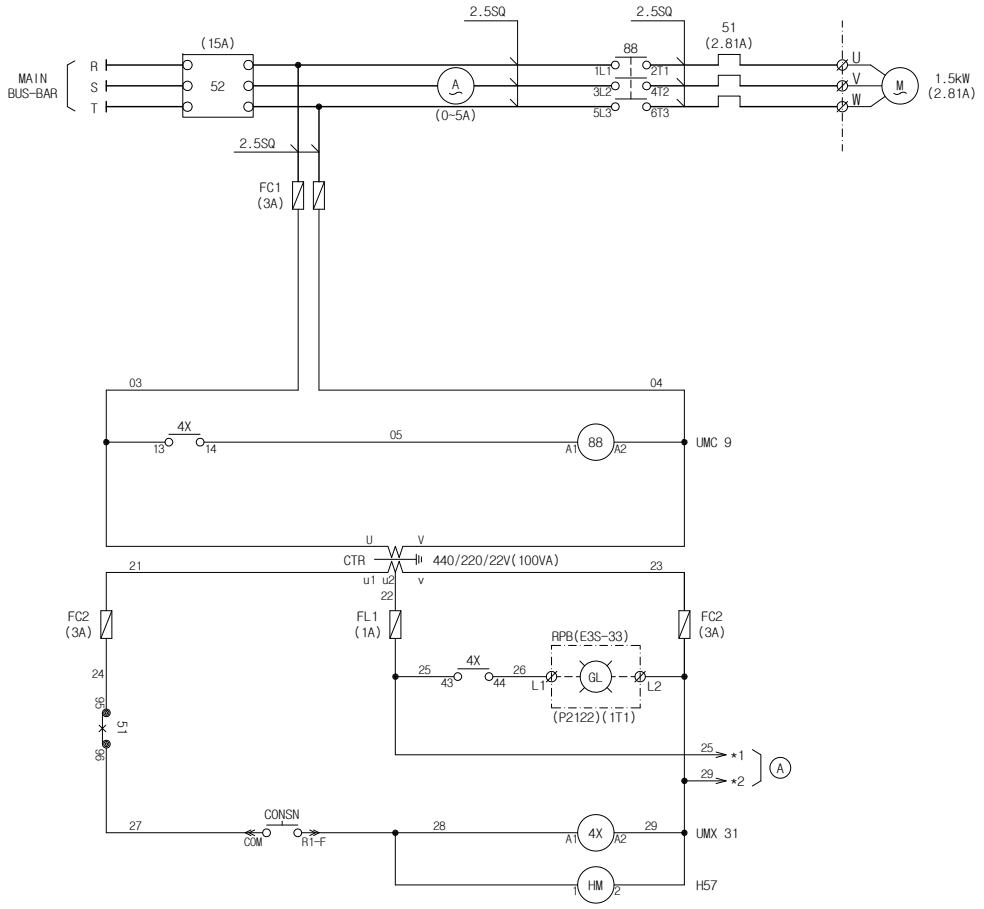

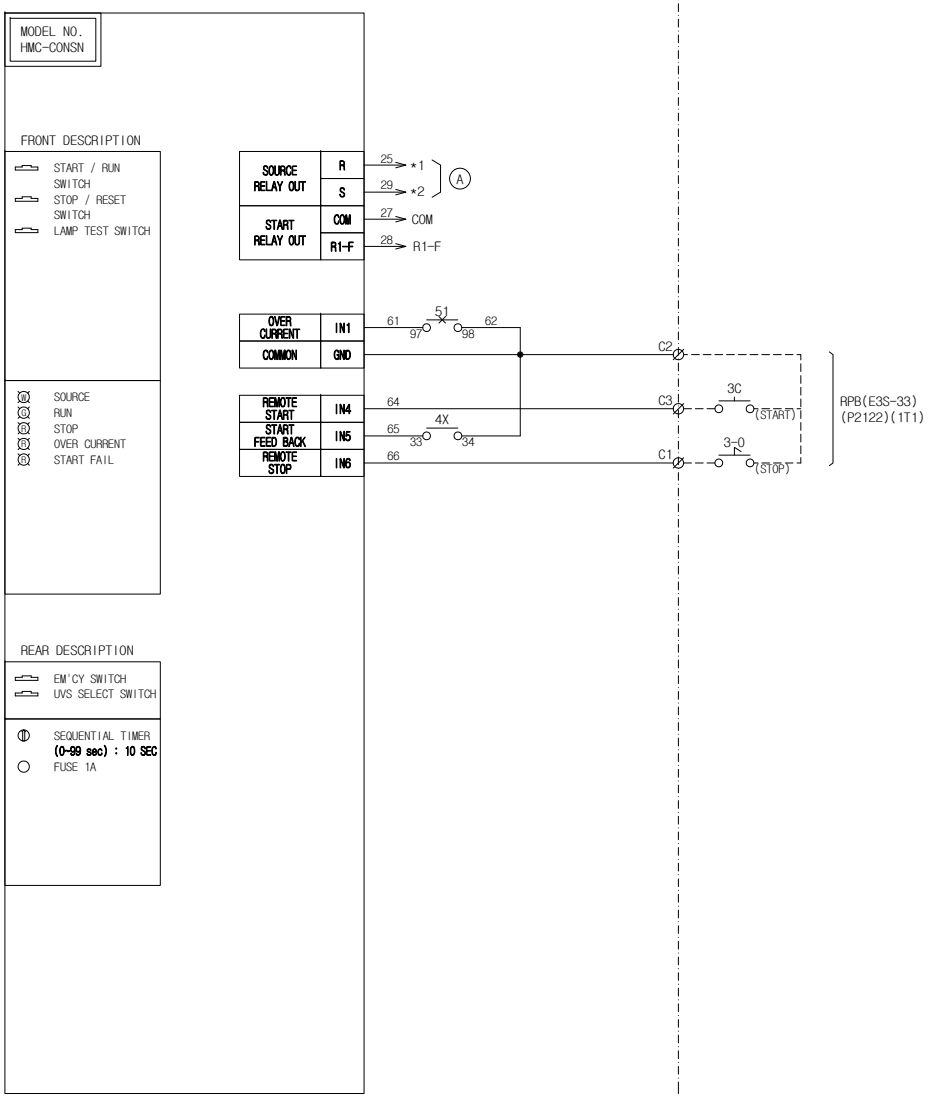

PROJECT No. S5130		TITLE	M/E J.W PRE-HEATER CIRC. PUMP (P2121)
HME		SHEET No.	SD104

0	1	2	3	4	5
6	7	8	9	10	11

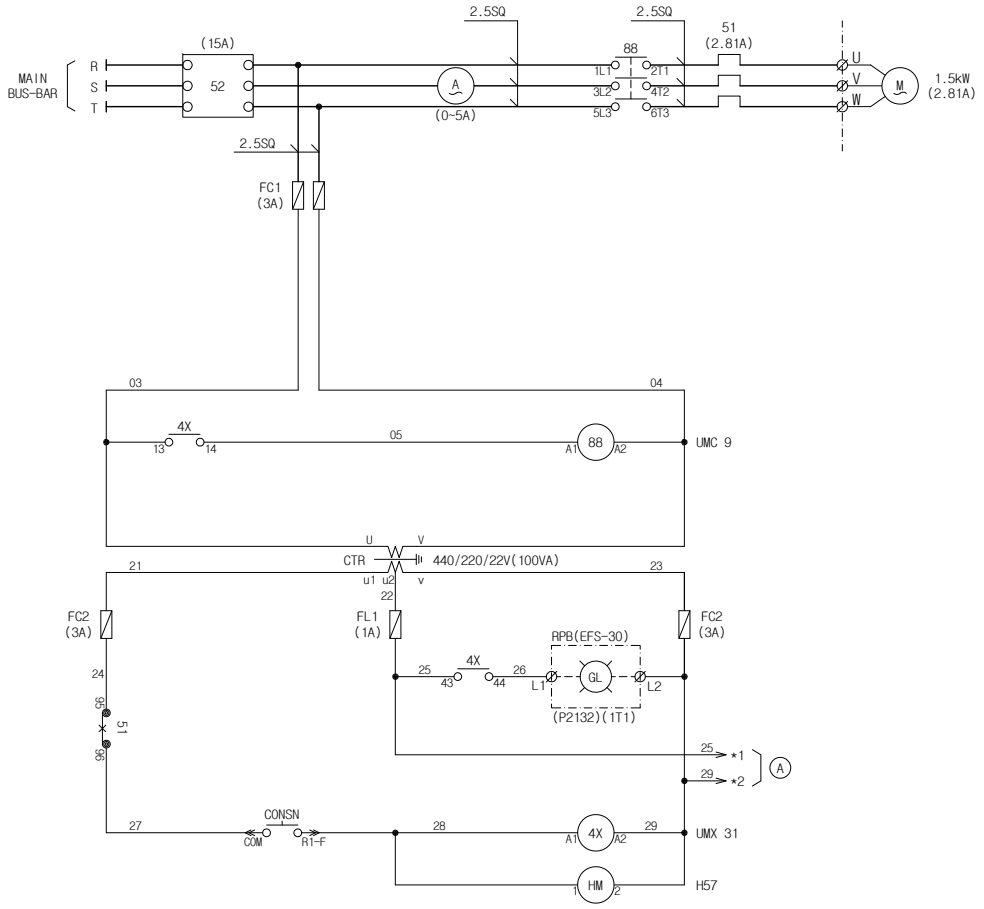

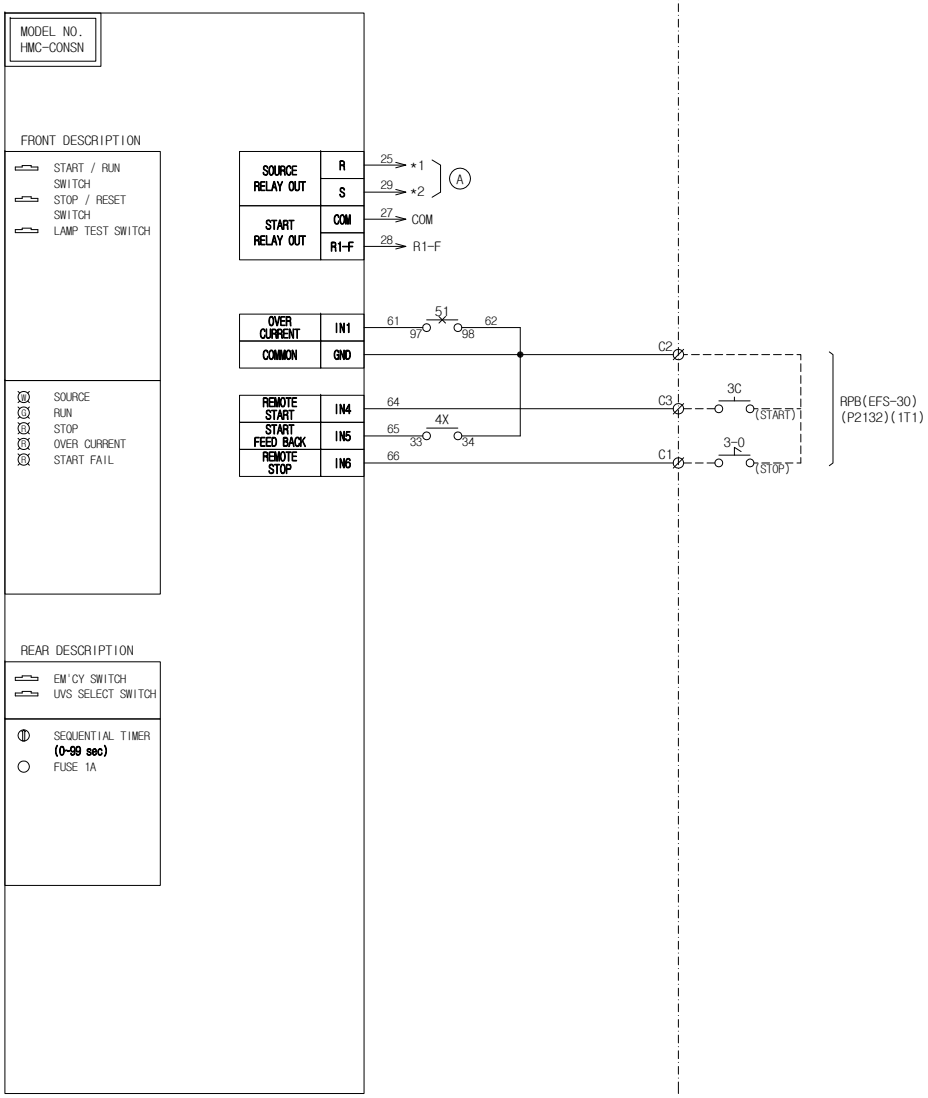

PROJECT No.	TITLE	MAIN AIR COOLER CLEANING PUMP (P2131)
S5130	SHEET No.	SD105

HME

0	1	2	3	4	5
6	7	8	9	10	11

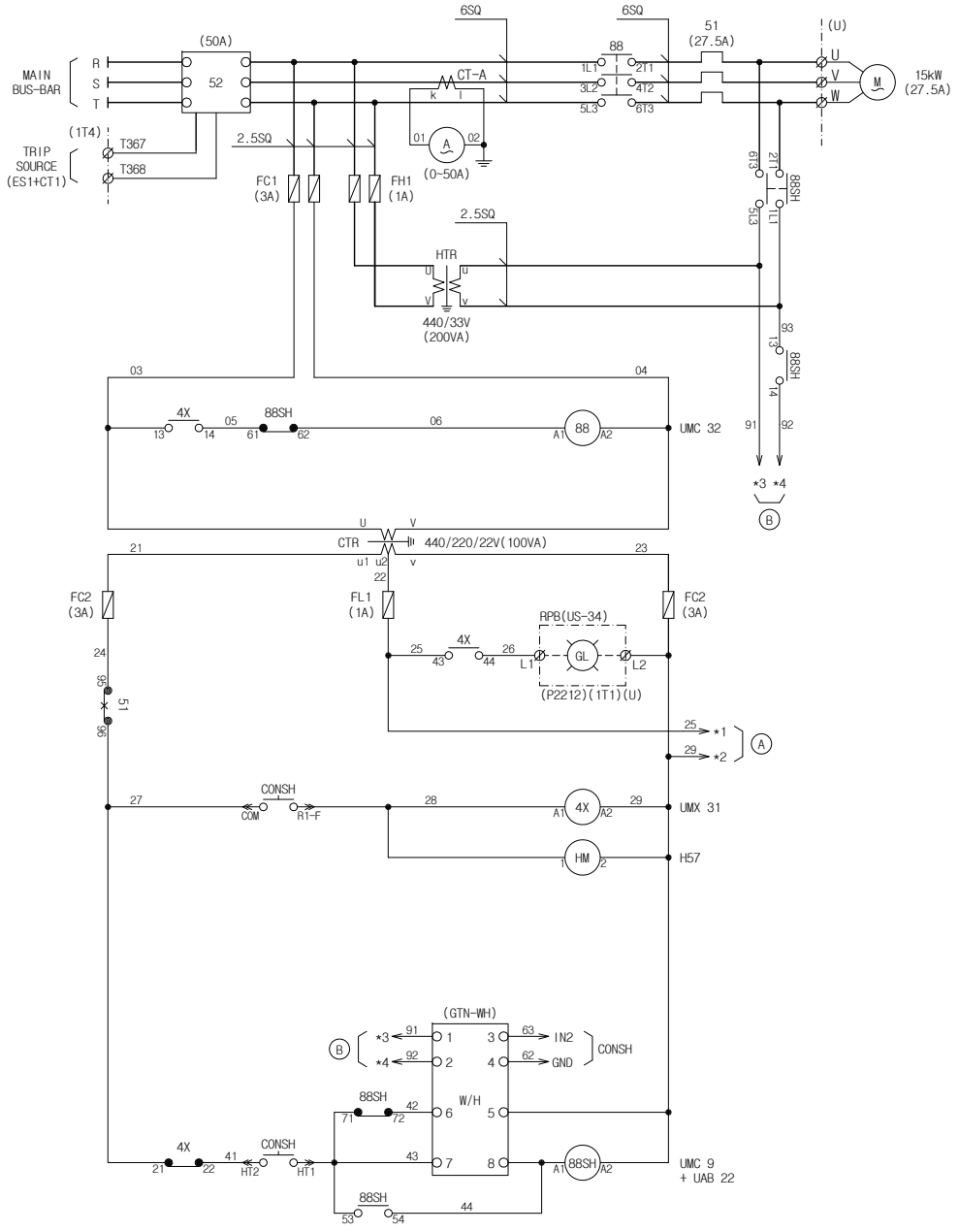

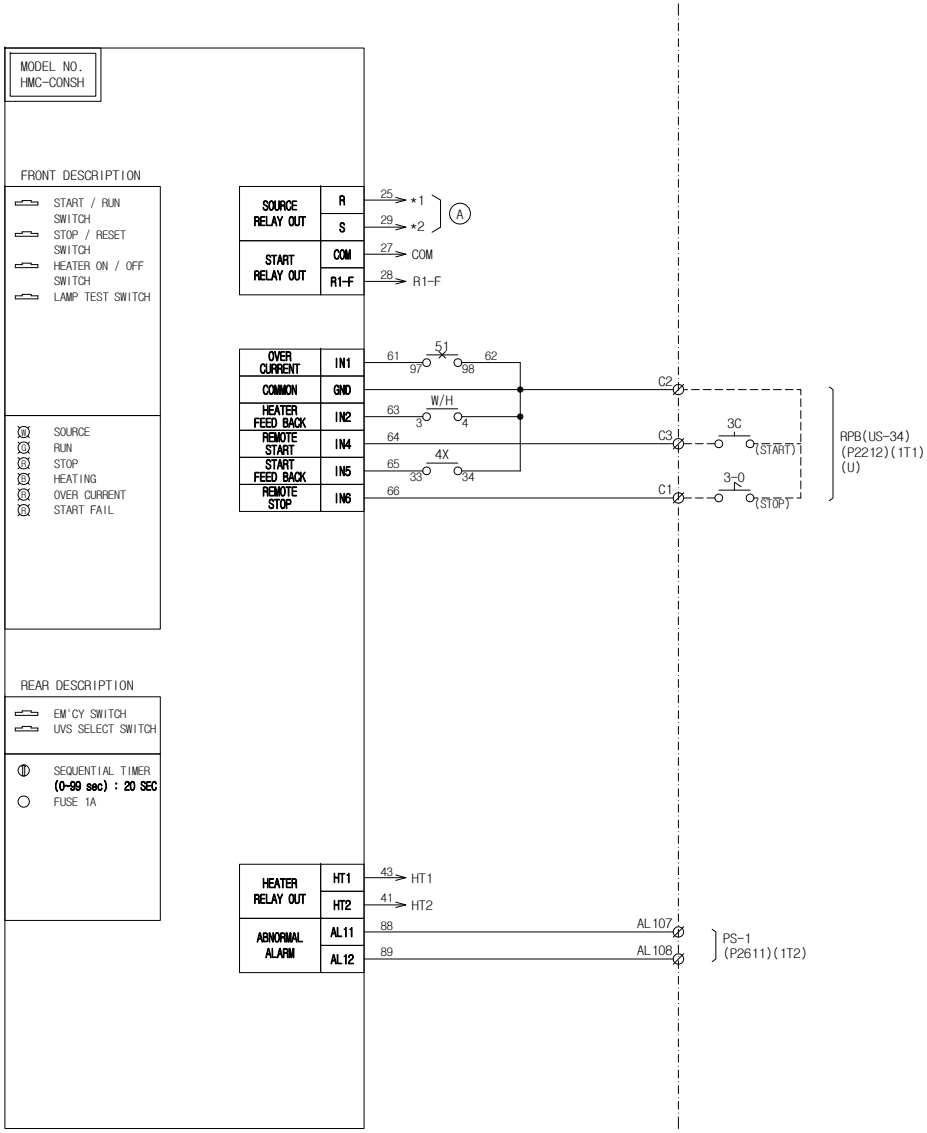

PROJECT No.	TITLE	
S5130		NO.1 E/R SUPPLY FAN (P2211)
HME	SHEET No.	SD106A

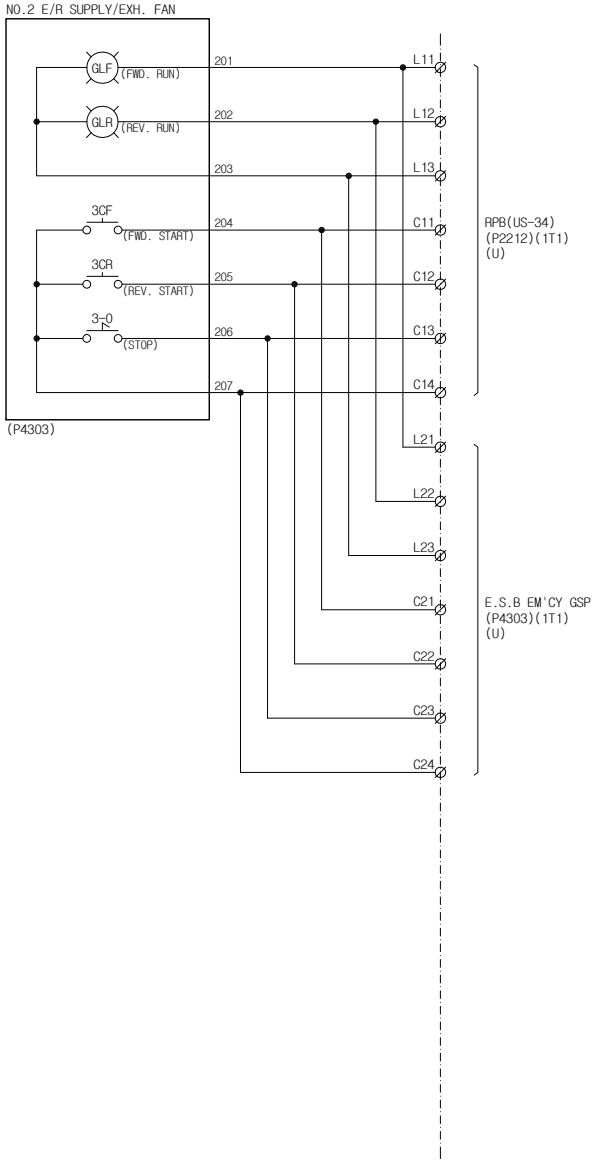

PROJECT No.	TITLE	
S5130	TITLE	NO.1 E/R SUPPLY FAN (P2221)
HME	SHEET No.	SD106B

0	1	2	3	4	5
6	7	8	9	10	11

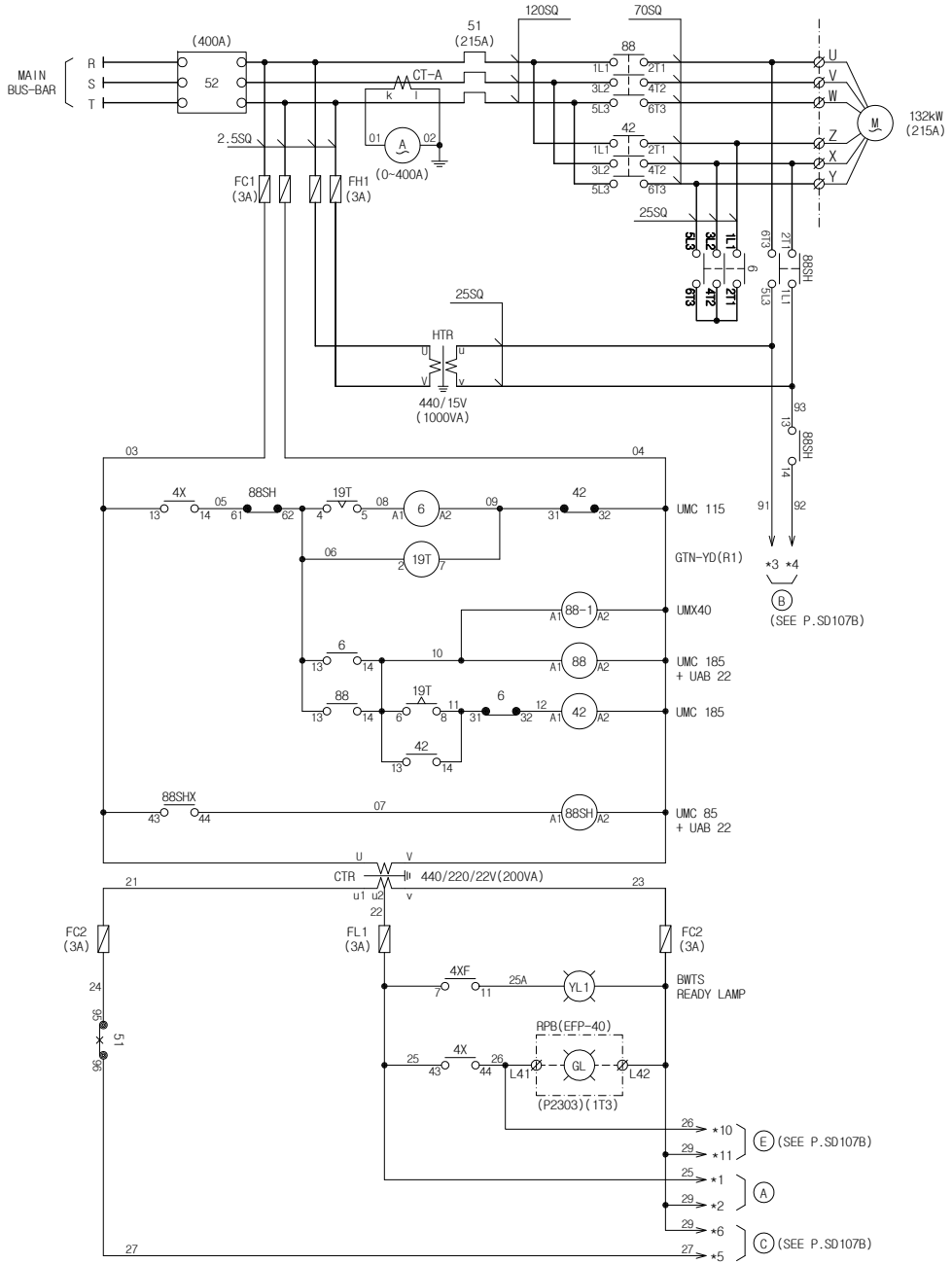

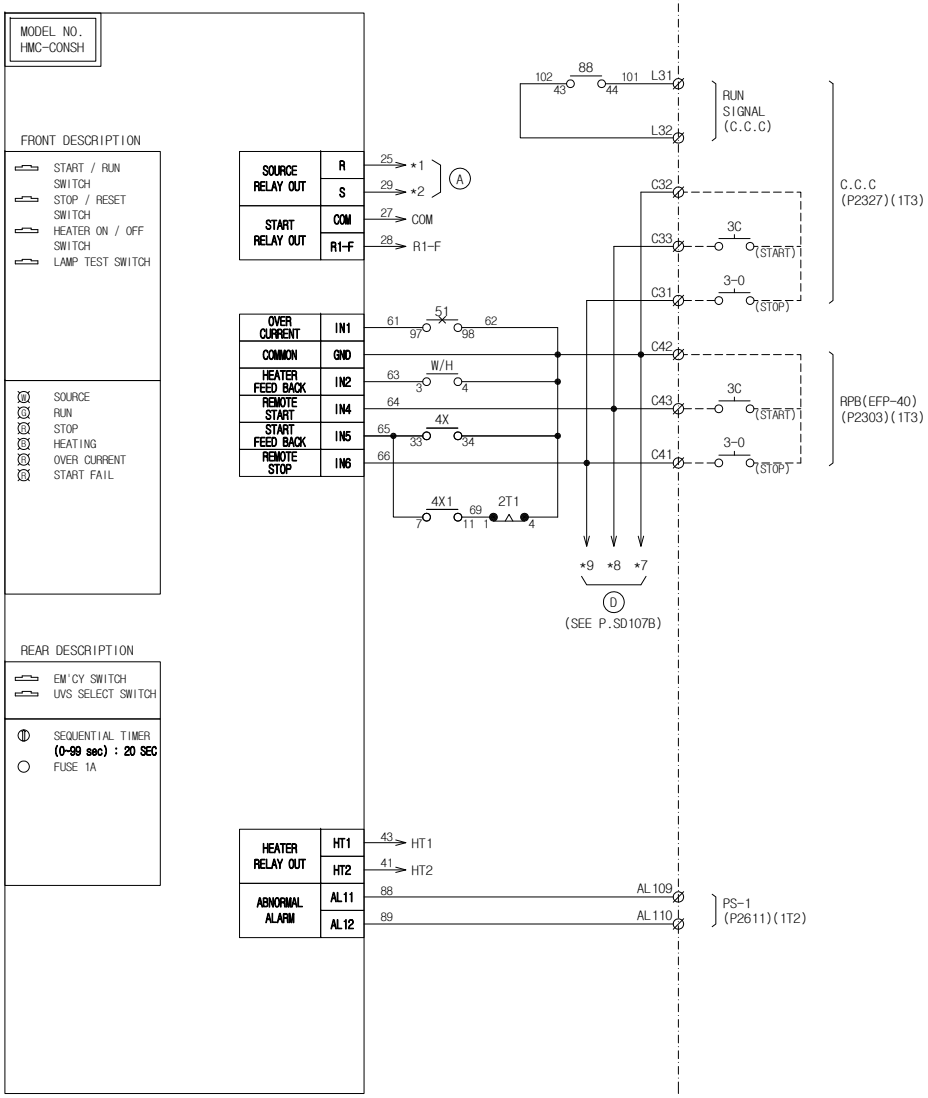

PROJECT No.	TITLE	NO.1 FIRE, BILGE & G/S PUMP (P2301,02)
S5130	SHEET No.	SD107A

HME

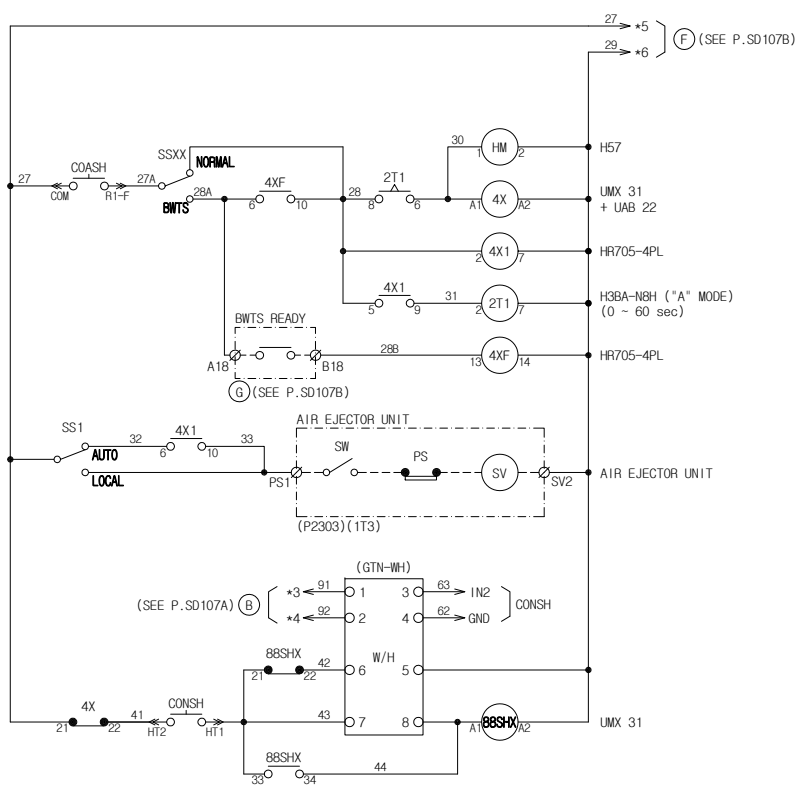

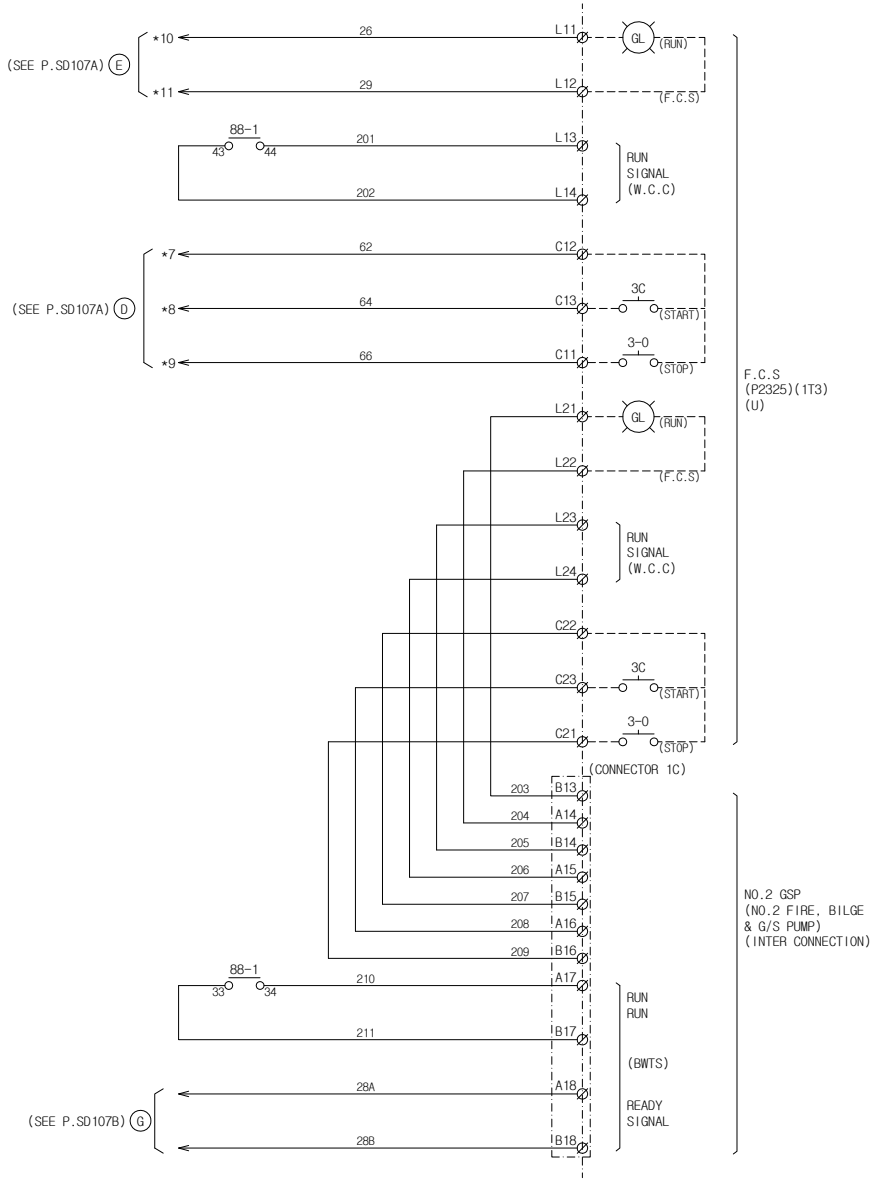

PROJECT No.	TITLE	
S5130	TITLE	NO.1 FIRE, BILGE & G/S PUMP (P2301,02)
HME	SHEET No.	SD107B

0	1	2	3	4	5
6	7	8	9	10	11

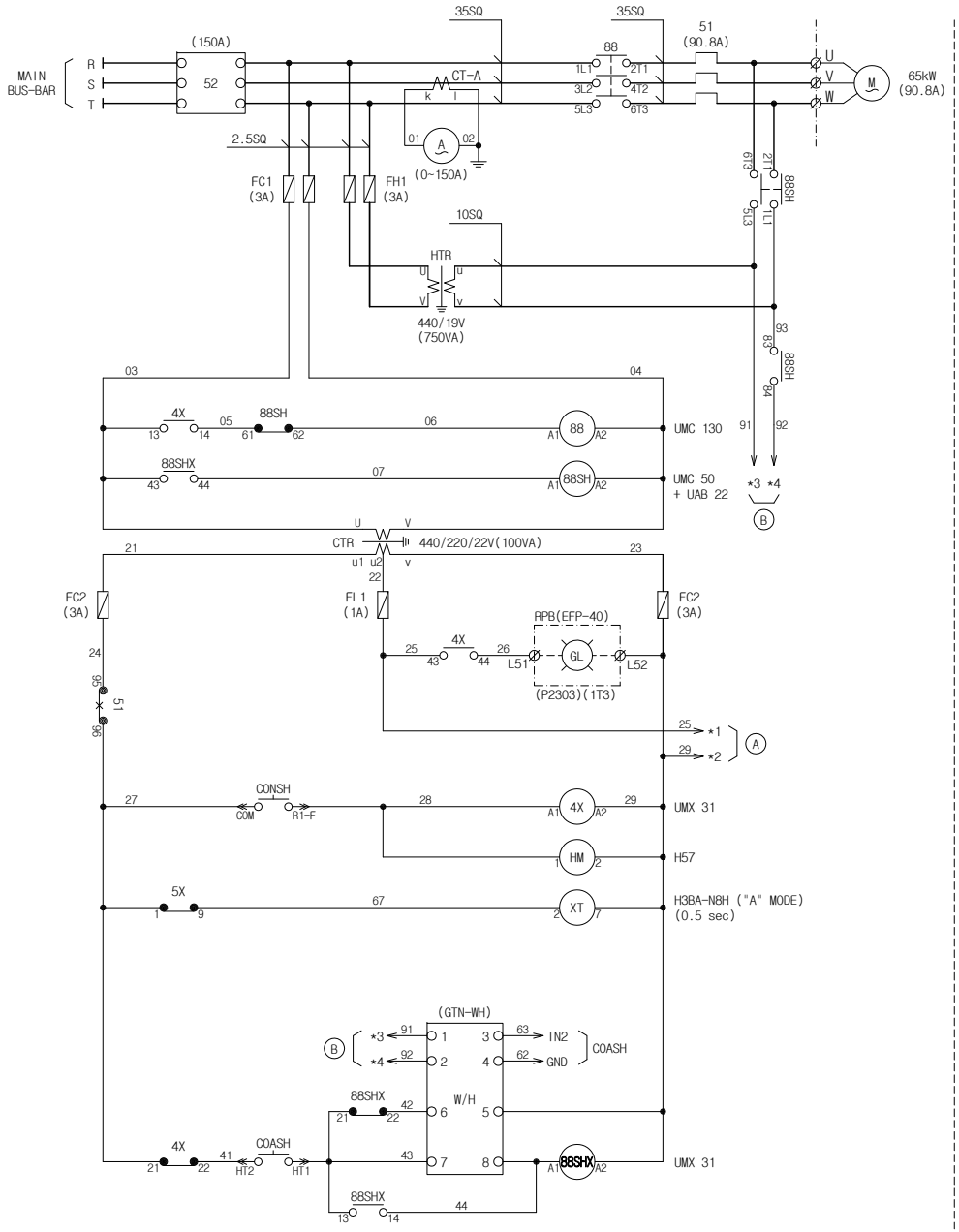

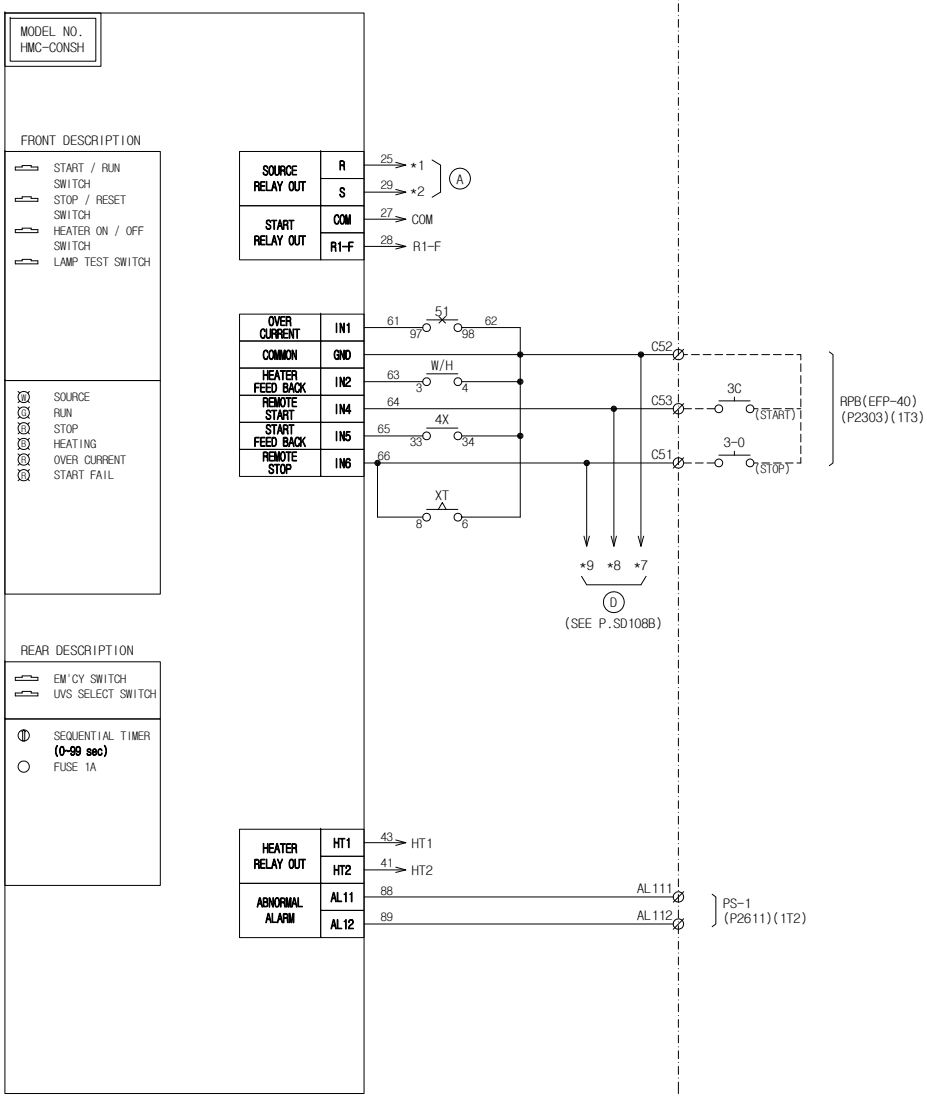

PROJECT No. S5130				TITLE	SCRUBBER C.S.W PUMP FOR I.G.G (P2331)
HME				SHEET No.	SD108A

0	1	2	3	4	5
6	7	8	9	10	11

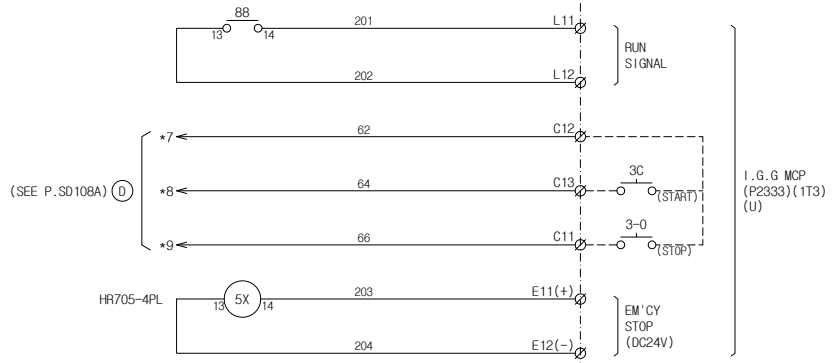

0	1	2	3	4	5		PROJECT No. S5130		TITLE	SCRUBBER C.S.W PUMP FOR I.G.G (P2331)
6	7	8	9	10	11		HME		SHEET No.	SD108B

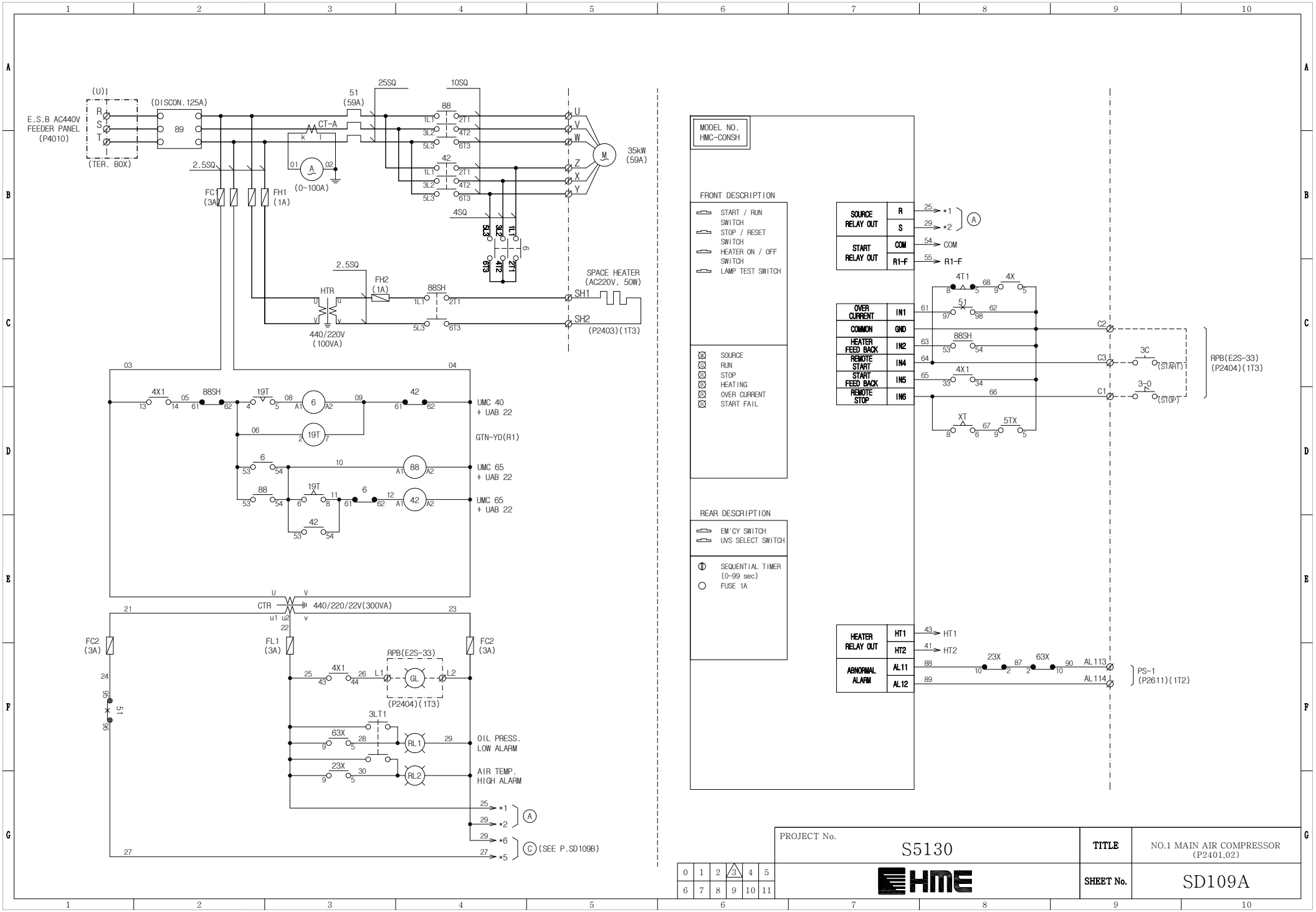

PROJECT No.	TITLE	NO.1 MAIN AIR COMPRESSOR (P2401,02)
S5130	SHEET No.	SD109A

HME

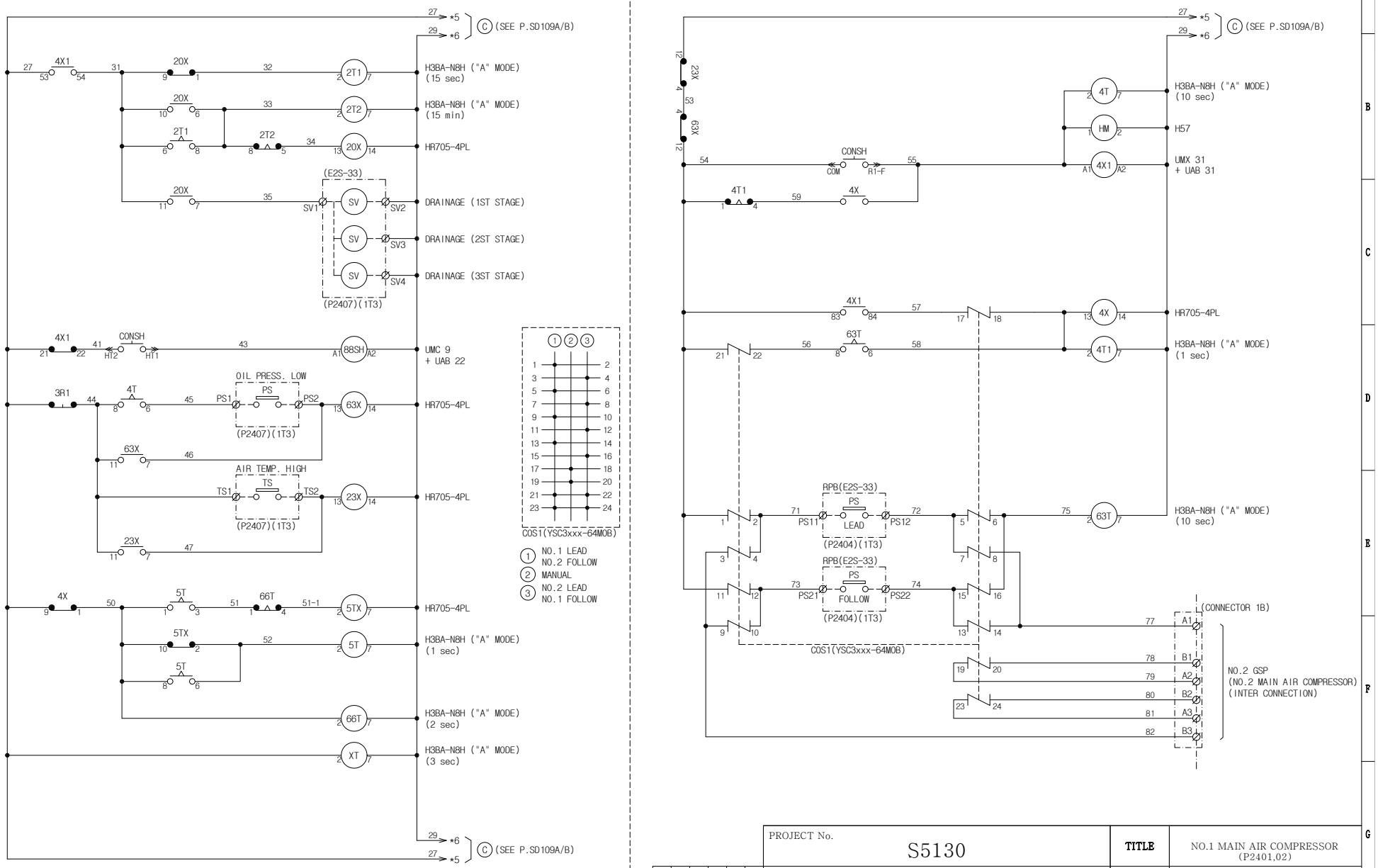

PROJECT No.	TITLE	NO.1 MAIN AIR COMPRESSOR (P2401,02)
S5130		
HME	SHEET No.	SD109B

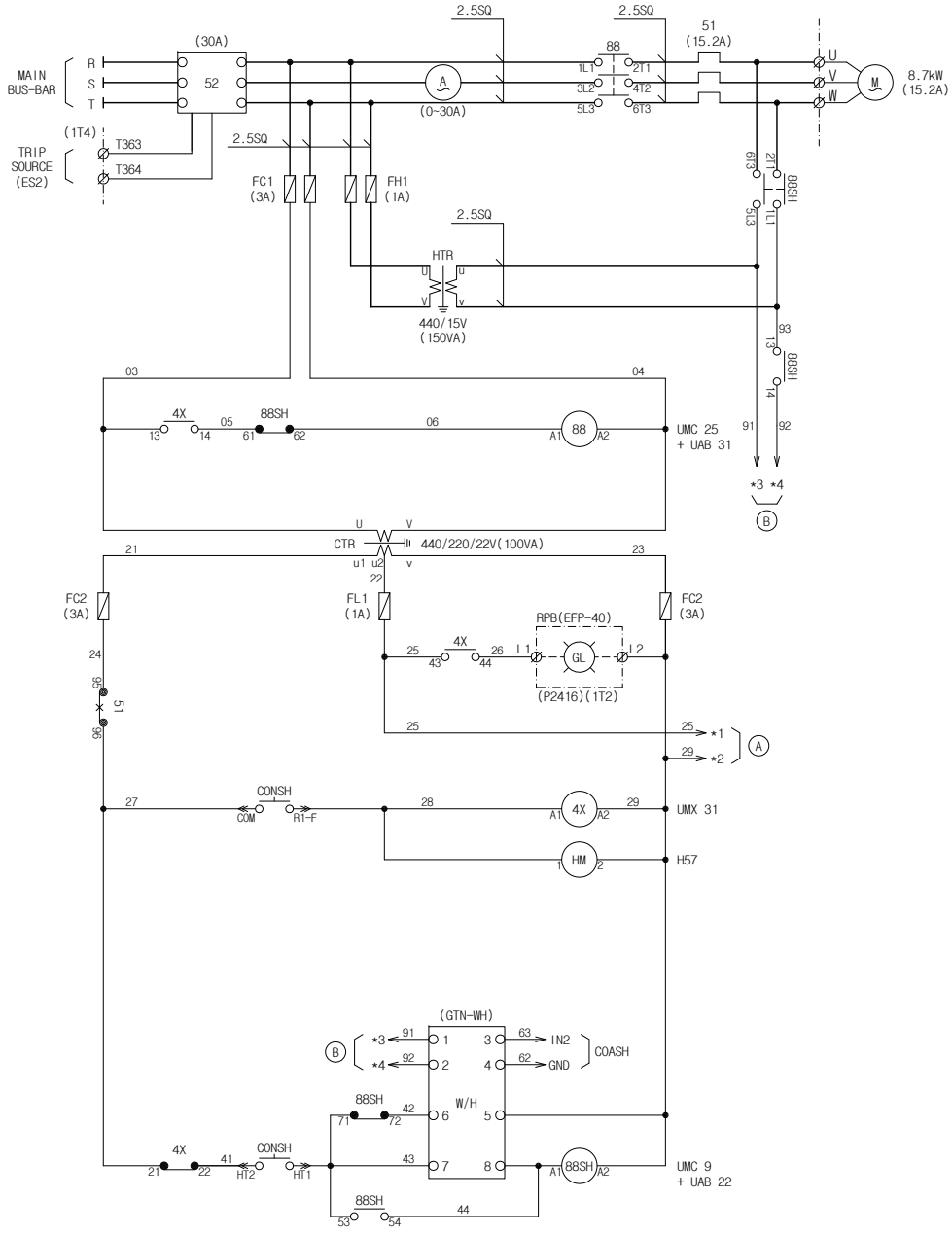

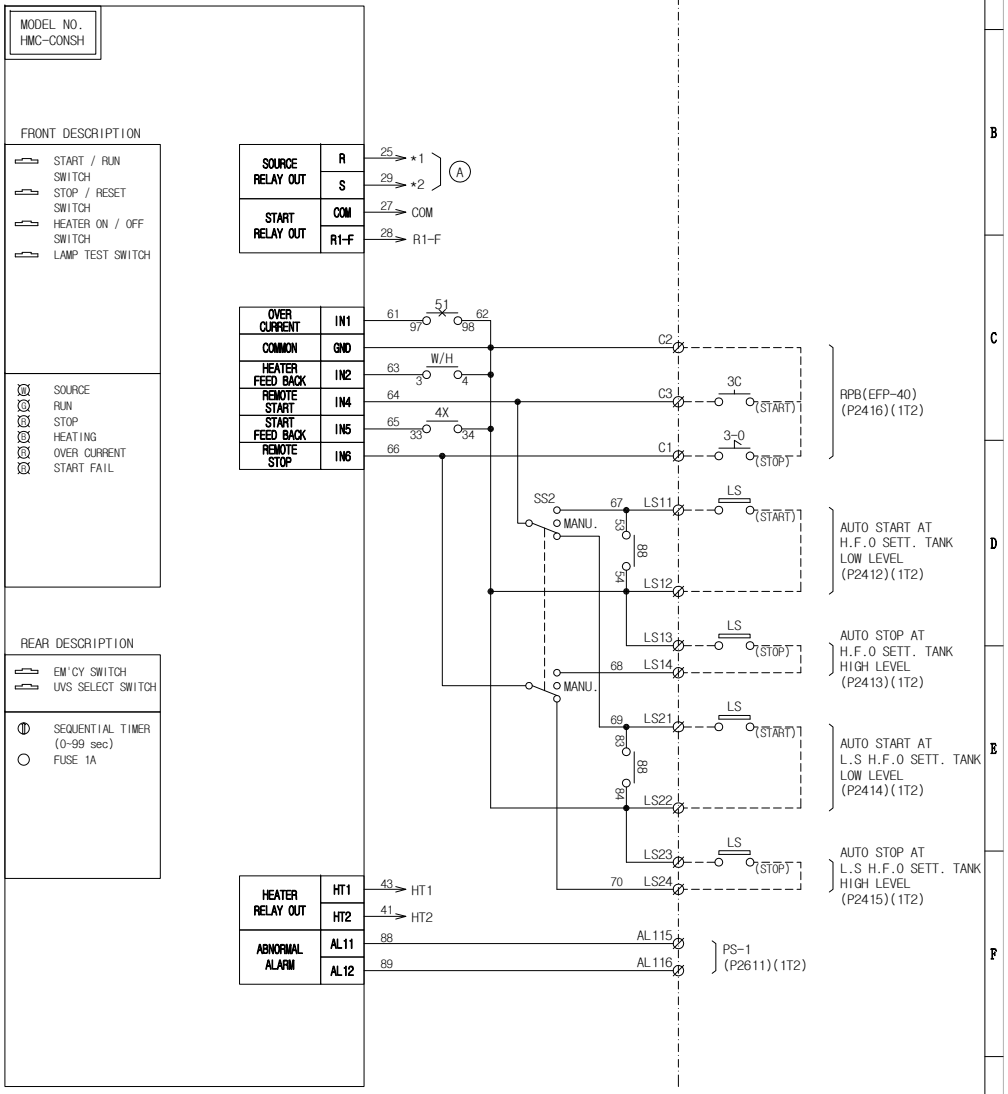

PROJECT No.	TITLE	
S5130		H.F.O TRANS. PUMP (P2411)
HME	SHEET No.	SD110

0	1	2	3	4	5
6	7	8	9	10	11

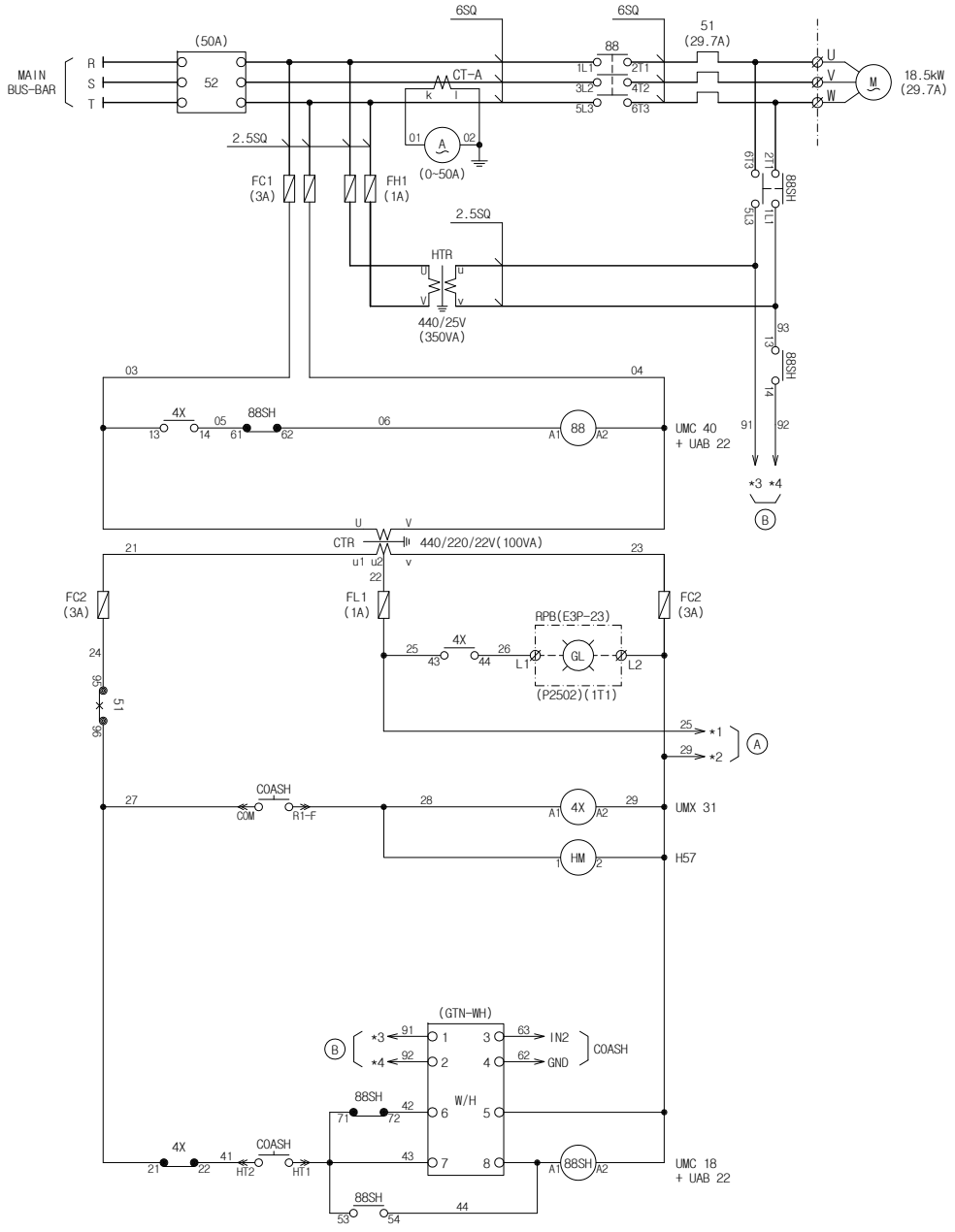

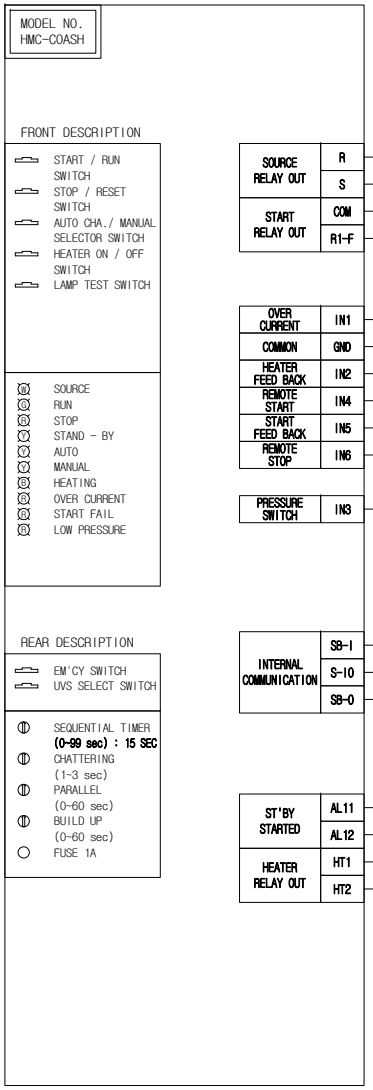

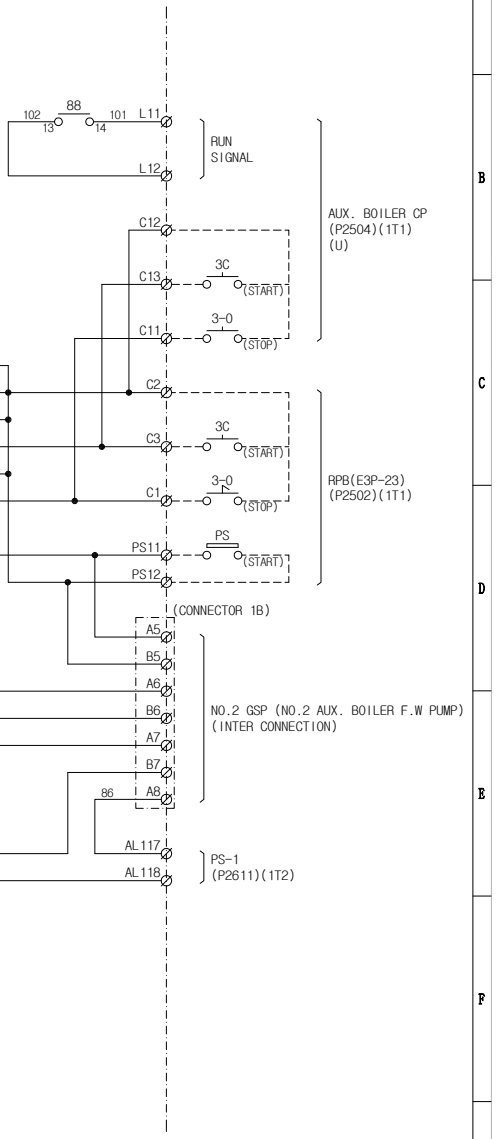

PROJECT No.	TITLE	NO.1 AUX. BOILER FEED WATER PUMP (P2501)
S5130	SHEET No.	SD111

HME

0	1	2	3	4	5
6	7	8	9	10	11

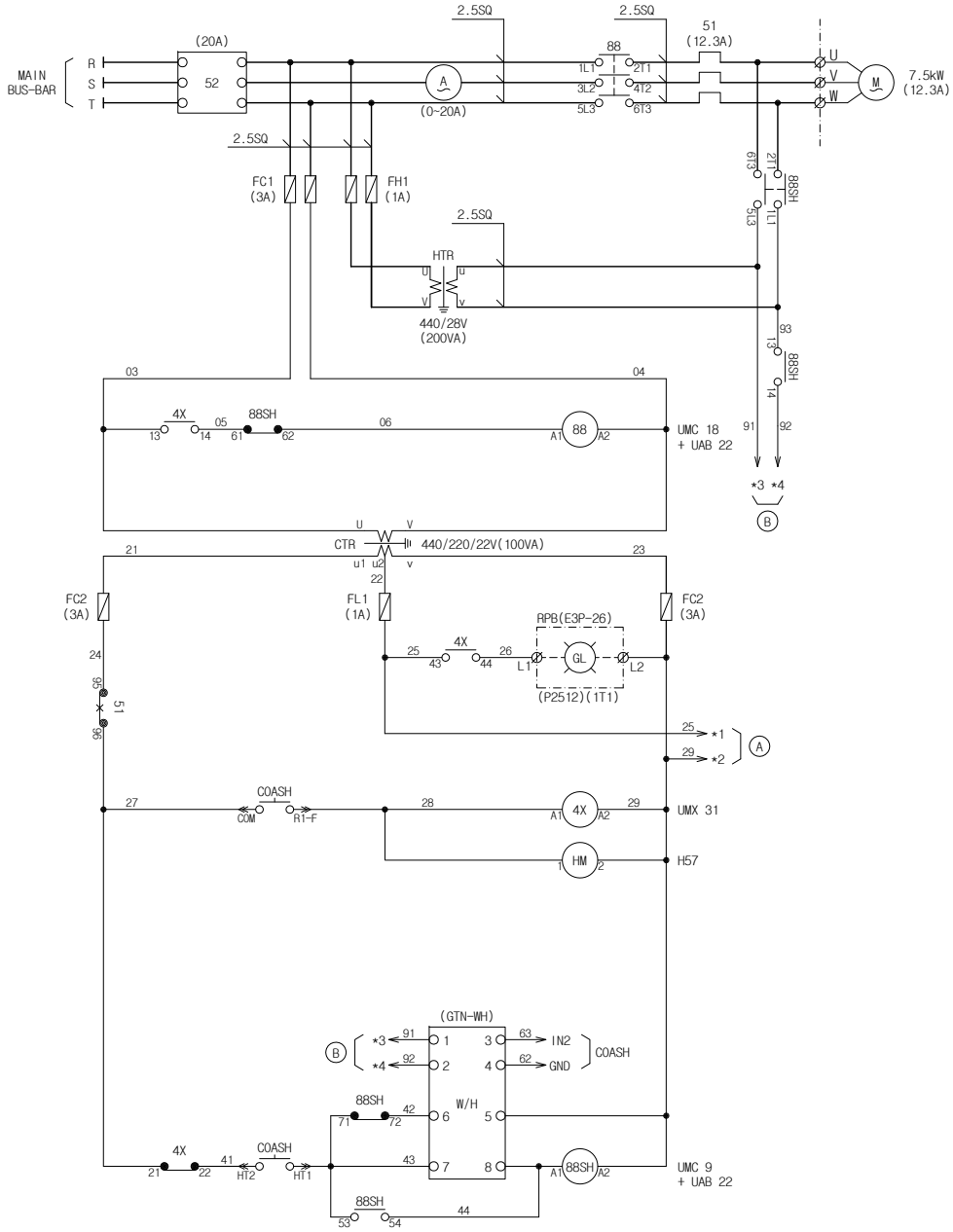

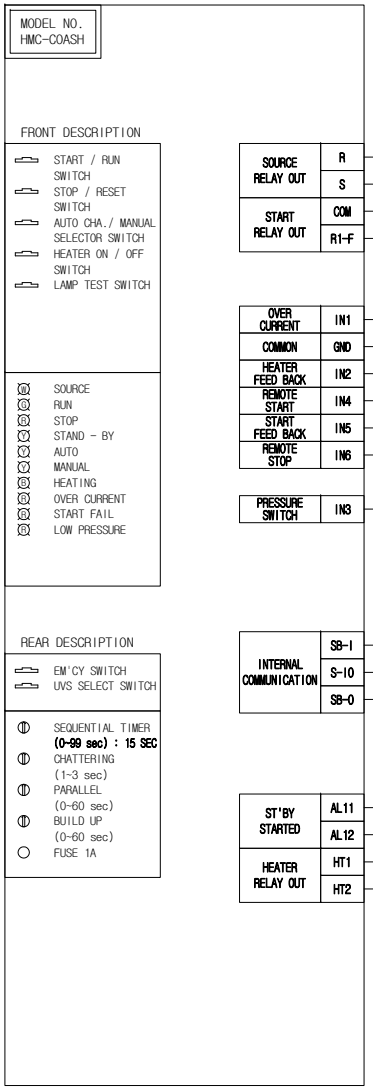

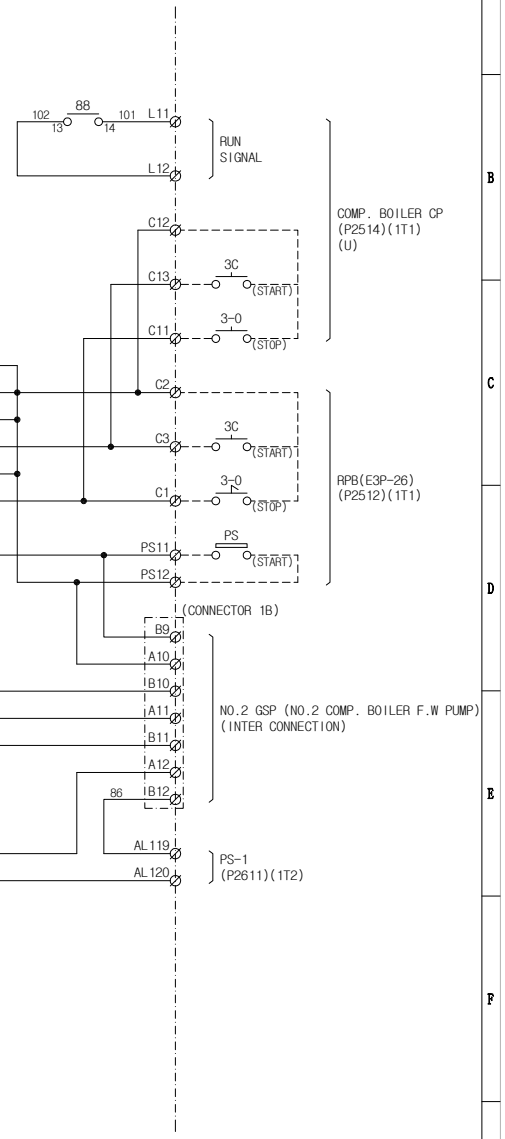

PROJECT No.	S5130	TITLE	NO.1 COMP. BOILER FEED WATER PUMP (P2511)
	HME	SHEET No.	SD112

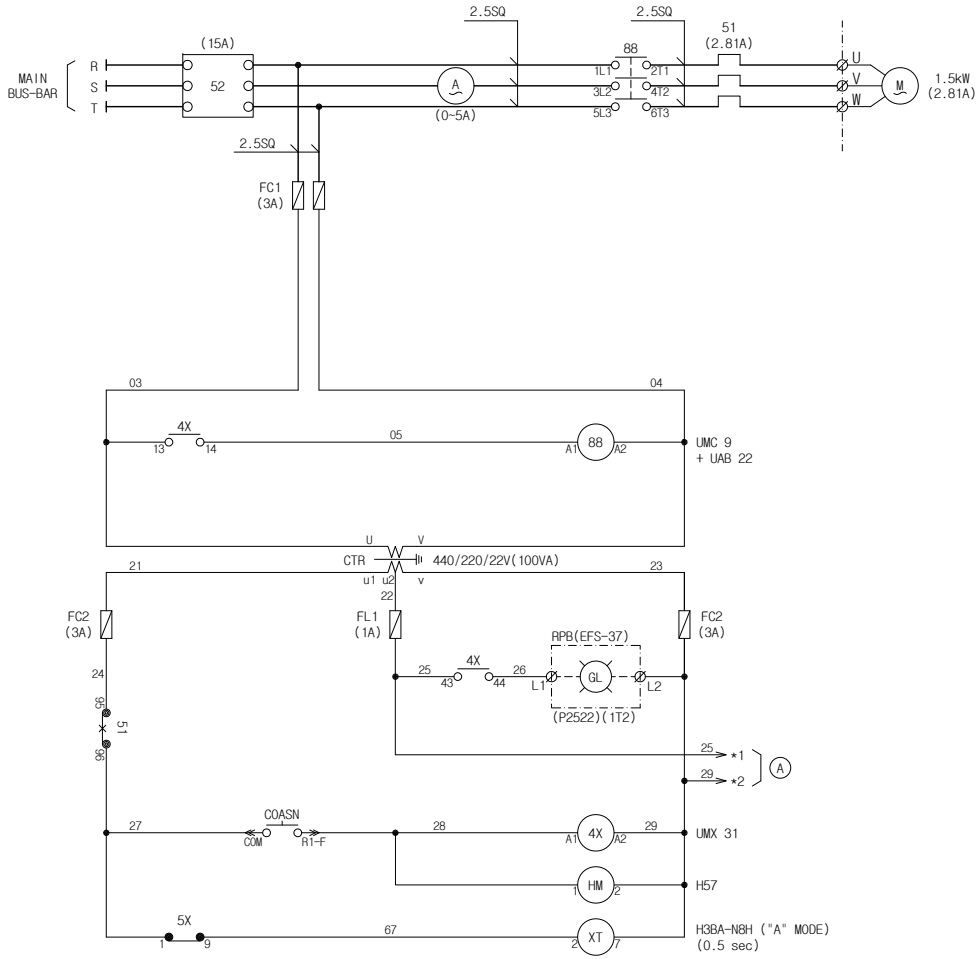

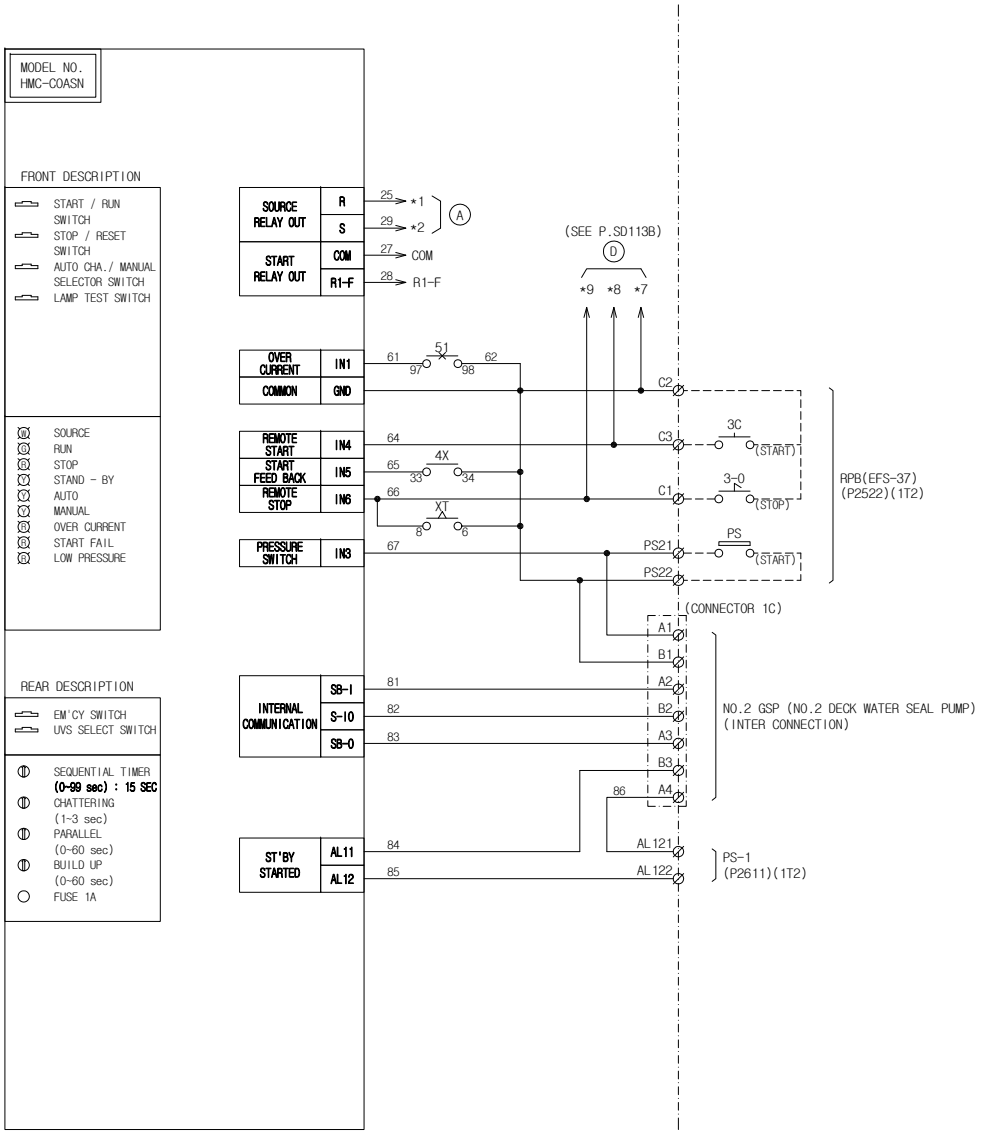

0	1	2	3	4	5
6	7	8	9	10	11

PROJECT No. S5130	TITLE	NO.1 DECK WATER SEAL PUMP (P2521)
HME	SHEET No.	SD113A

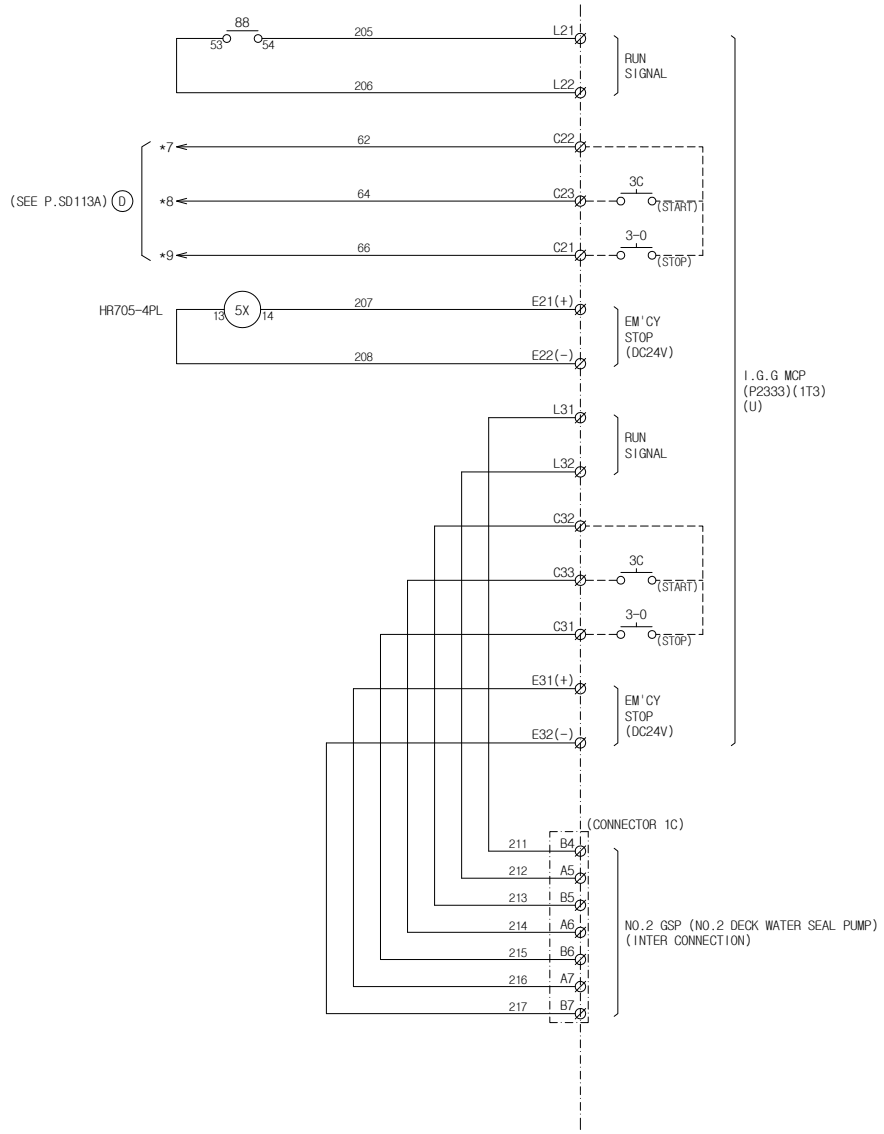

PROJECT No.	TITLE	
S5130		NO.1 DECK WATER SEAL PUMP (P2521)
HME	SHEET No.	SD113B

0	1	2	3	4	5
6	7	8	9	10	11

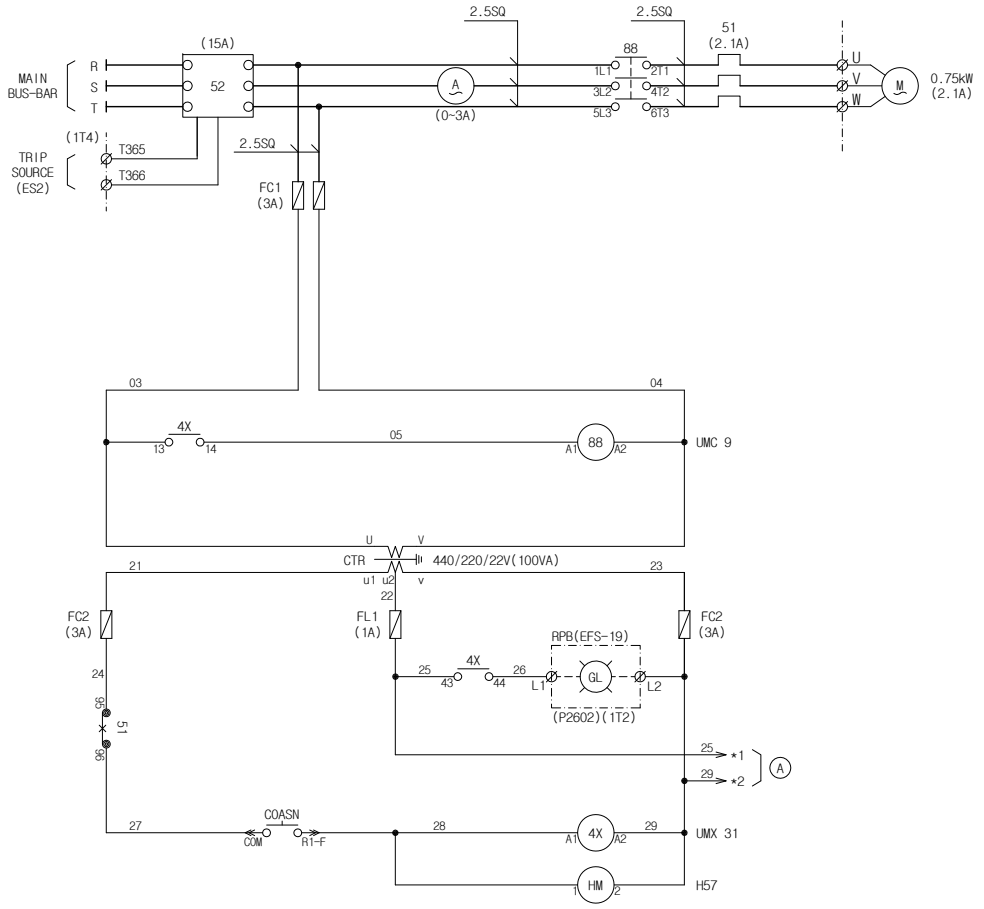

MODEL NO.
HMC-COASN

FRONT DESCRIPTION

- START / RUN SWITCH
- STOP / RESET SWITCH
- AUTO CHA./ MANUAL SELECTOR SWITCH
- LAMP TEST SWITCH

- SOURCE
- RUN
- STOP
- STAND - BY
- AUTO
- MANUAL
- OVER CURRENT
- START FAIL
- LOW PRESSURE

REAR DESCRIPTION

- EM'CY SWITCH
- UVS SELECT SWITCH

- SEQUENTIAL TIMER (0-99 sec) : 5 SEC
- CHATTERING (1-3 sec)
- PARALLEL (0-60 sec)
- BUILD UP (0-60 sec)
- FUSE 1A

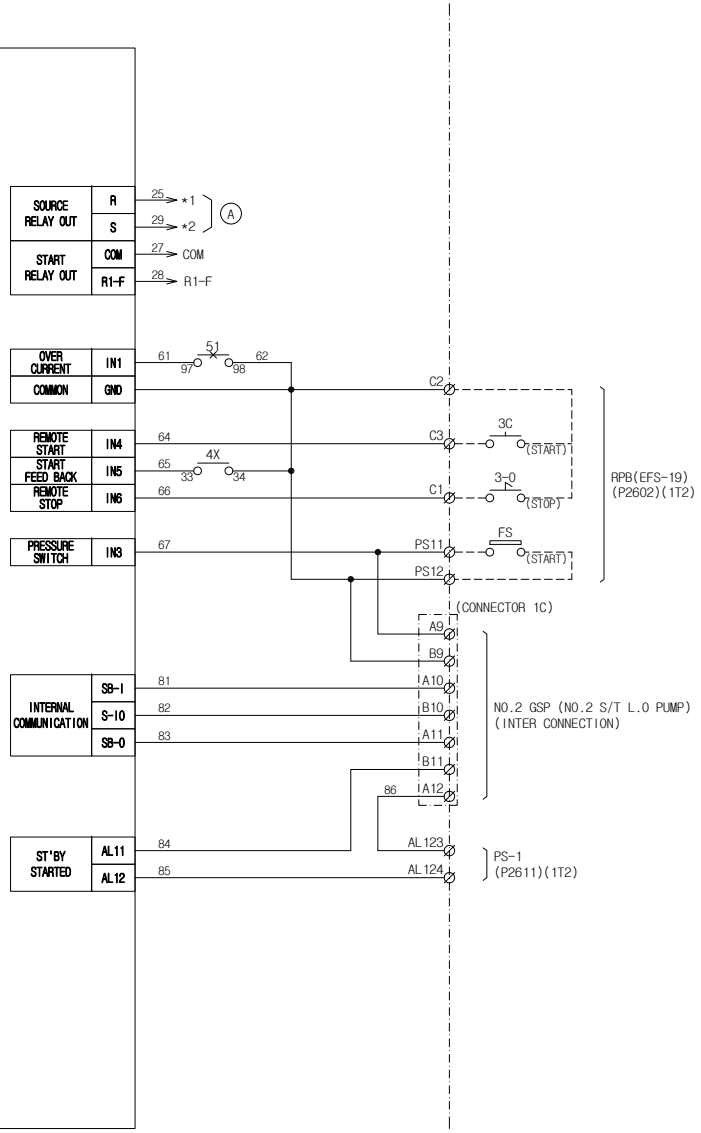

PROJECT No.	TITLE	
S5130	TITLE	NO.1 S/T L.O PUMP (P2601)
HME	SHEET No.	SD114

0	1	2	3	4	5
6	7	8	9	10	11

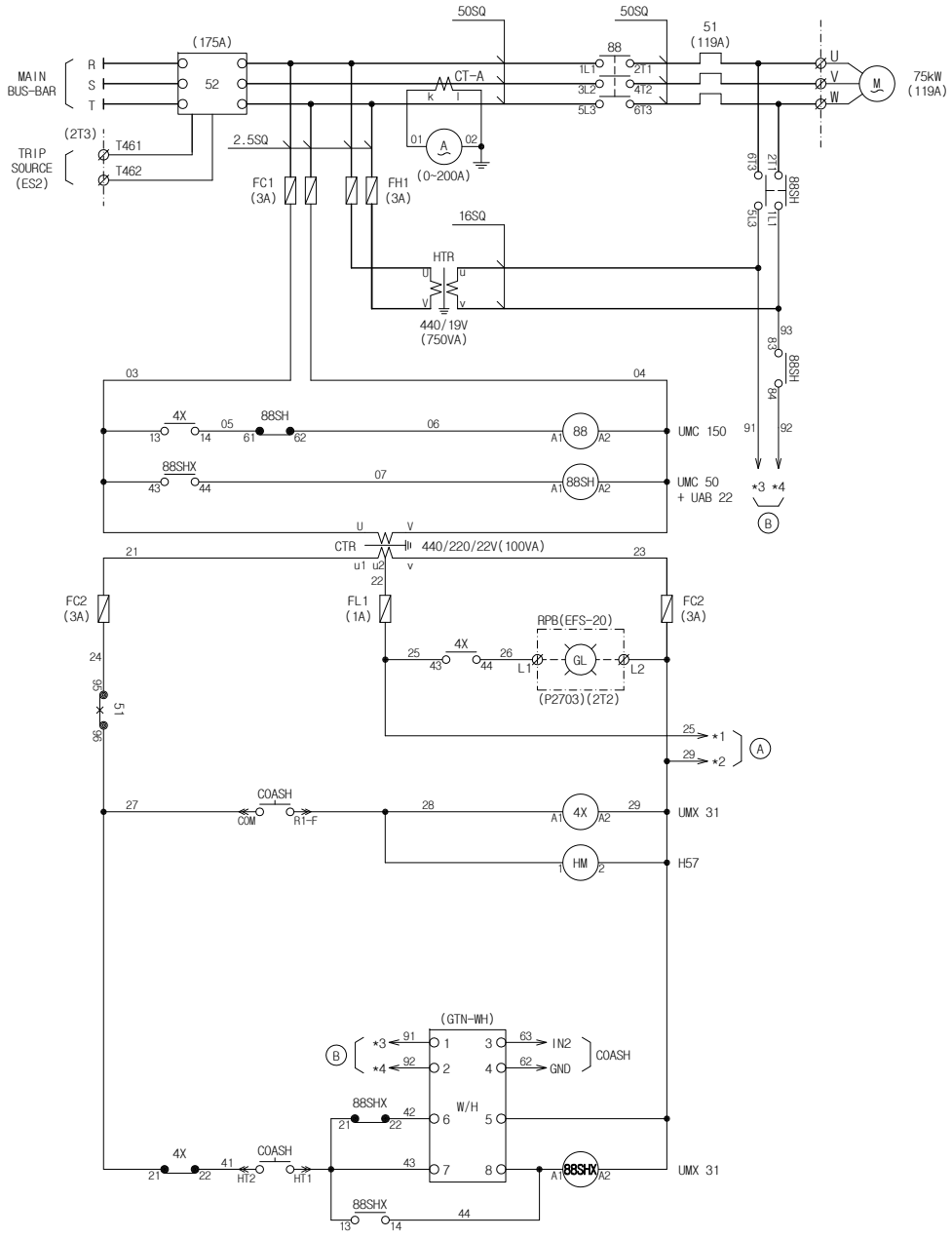

MODEL NO.
HMC-COASH

FRONT DESCRIPTION

- START / RUN SWITCH
- STOP / RESET SWITCH
- AUTO CHA./ MANUAL SELECTOR SWITCH
- HEATER ON / OFF SWITCH
- LAMP TEST SWITCH

- SOURCE
- RUN
- STOP
- STAND - BY
- AUTO
- MANUAL
- HEATING
- OVER CURRENT
- START FAIL
- LOW PRESSURE

REAR DESCRIPTION

- EM'CY SWITCH
- UVS SELECT SWITCH

- SEQUENTIAL TIMER (0-99 sec) : 5 SEC
- CHATTERING (1-3 sec)
- PARALLEL (0-60 sec)
- BUILD UP (0-60 sec)
- FUSE 1A

SOURCE RELAY OUT	R	25	*1
	S	29	*2
START RELAY OUT	COM	27	COM
	R1-F	28	R1-F
OVER CURRENT	IN1	61	51 (97, 98) 62
COMMON	GND		
HEATER FEED BACK	IN2	63	W/H (3, 4)
REMOTE START	IN4	64	
START FEED BACK	IN5	65	4X (33, 34)
REMOTE STOP	IN6	66	
PRESSURE SWITCH	IN3	67	
INTERNAL COMMUNICATION	SB-I	81	
	S-IO	82	
	SB-O	83	
ST'BY STARTED	AL11	84	
	AL12	85	
HEATER RELAY OUT	HT1	43	HT1
	HT2	41	HT2

(CONNECTOR 2A)

RPB(EFP-18) (P2703)(2T2)

3C (START)

3-0 (STOP)

NO.1 GSP (NO.1 MAIN L.O PUMP) (INTER CONNECTION)

0	1	2	3	4	5
6	7	8	9	10	11

PROJECT No.	S5130	TITLE	NO.2 MAIN L.O PUMP (P2701)
	HME	SHEET No.	SD201A

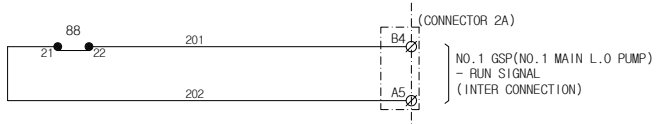

0	1	2	3	4	5						
6	7	8	9	10	11						

PROJECT No.	S5130	TITLE	NO.2 MAIN L.O PUMP (P2701)
	HME	SHEET No.	SD201B

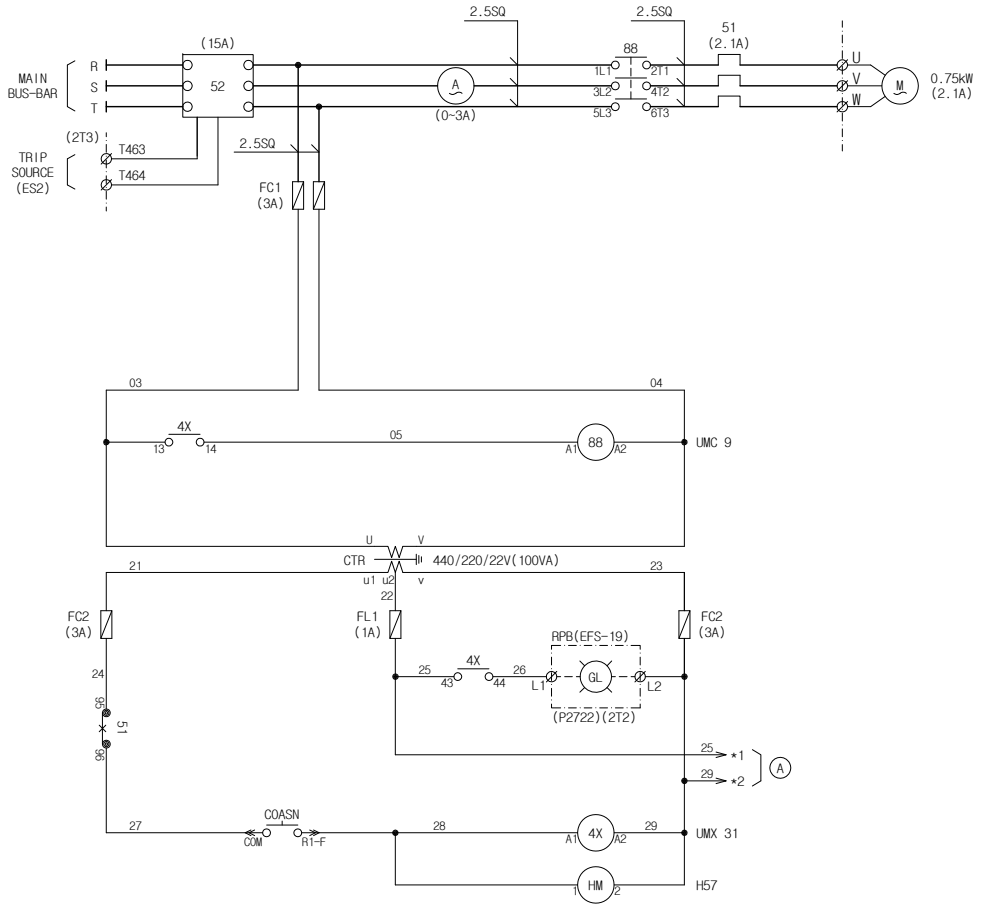

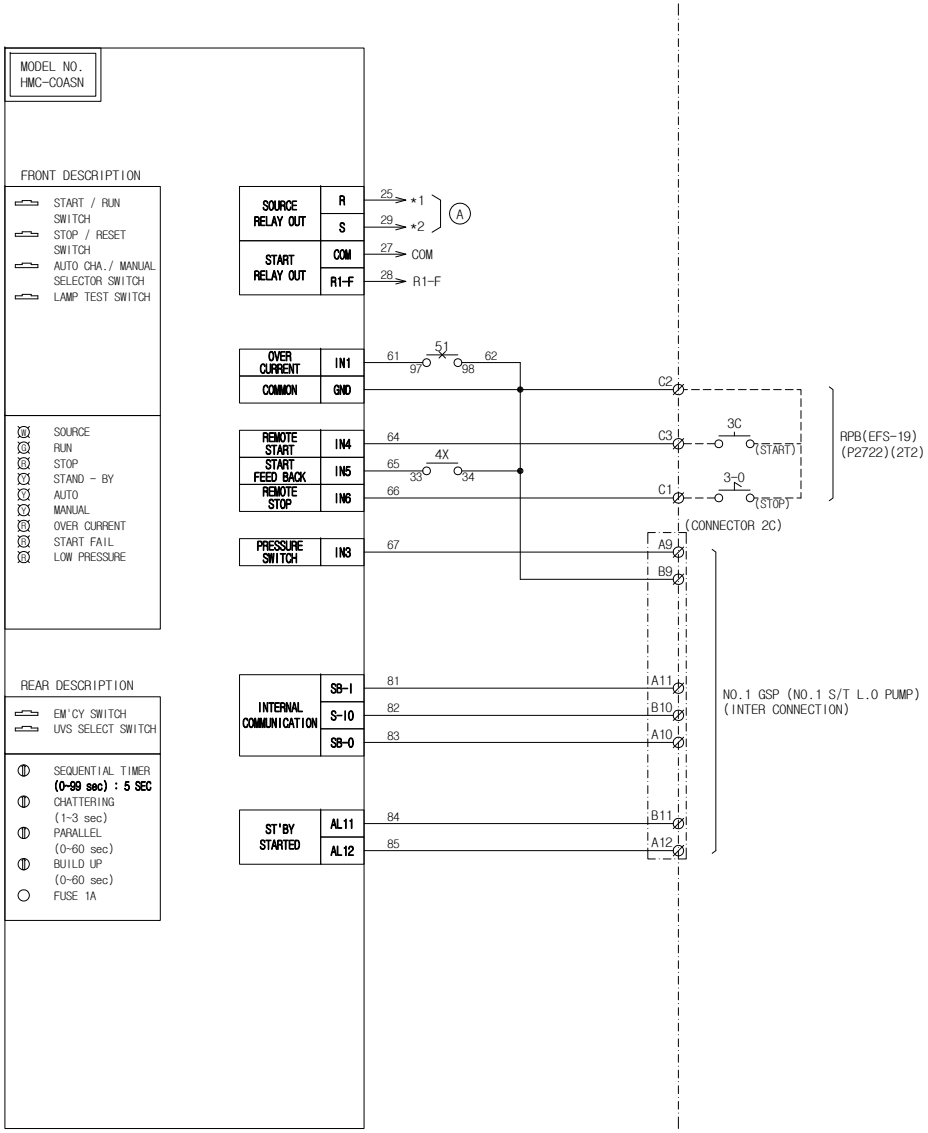

PROJECT No.	TITLE	
S5130	TITLE	NO.2 S/T L.O PUMP (P2721)
HME	SHEET No.	SD202

0	1	2	3	4	5
6	7	8	9	10	11

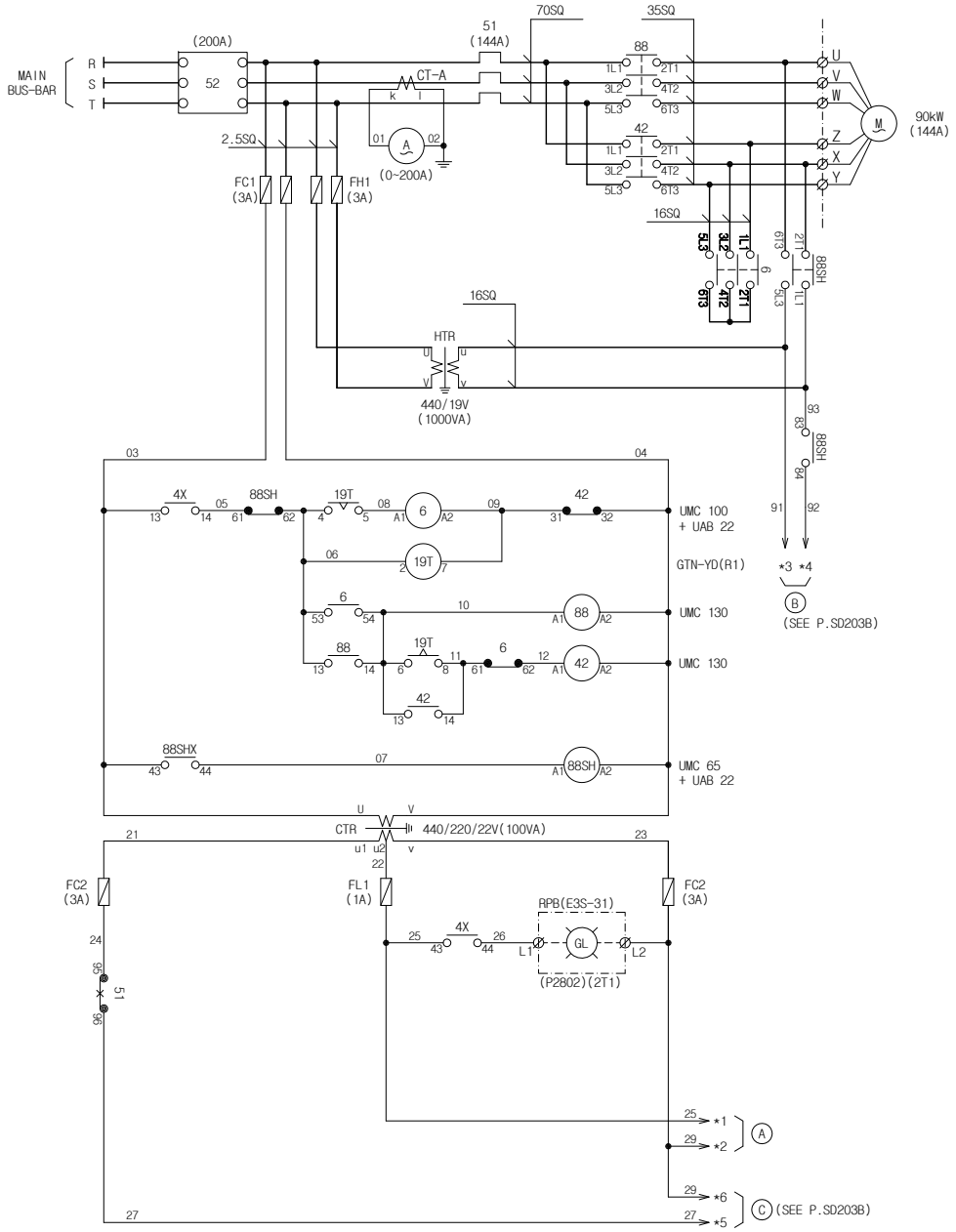

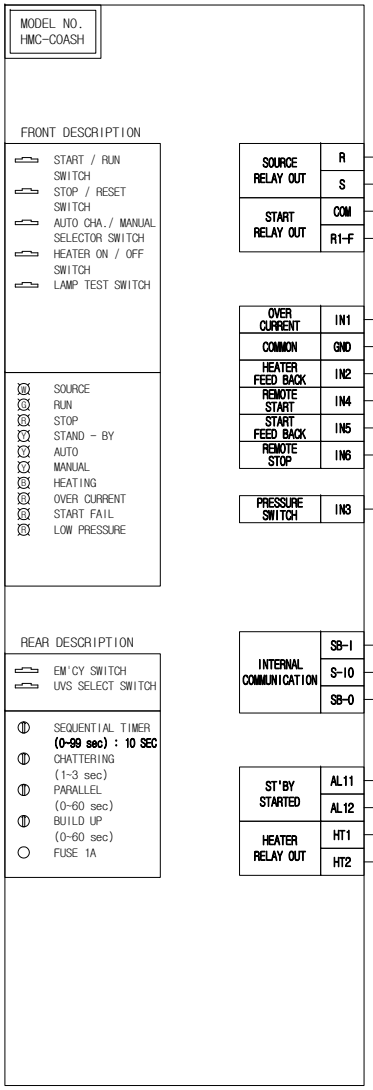

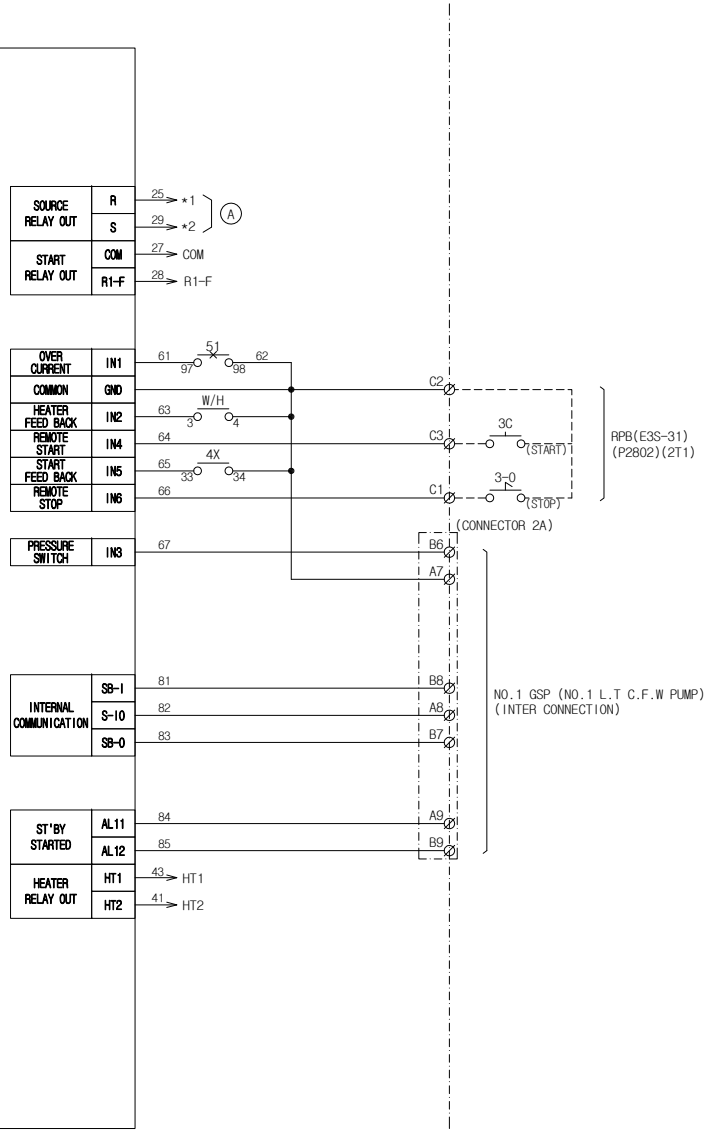

PROJECT No.	TITLE	NO.2 L.T C.F.W PUMP (P2801,05)
S5130	SHEET No.	SD203A

HME

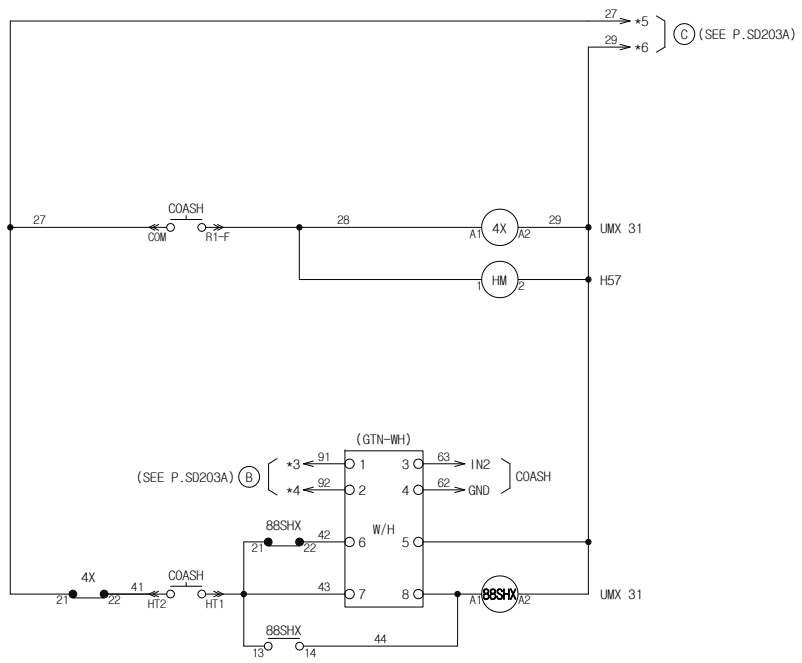

PROJECT No.	S5130	TITLE	NO.2 L.T C.F.W PUMP (P2801,05)
	HME	SHEET No.	SD203B

0	1	2	3	4	5
6	7	8	9	10	11

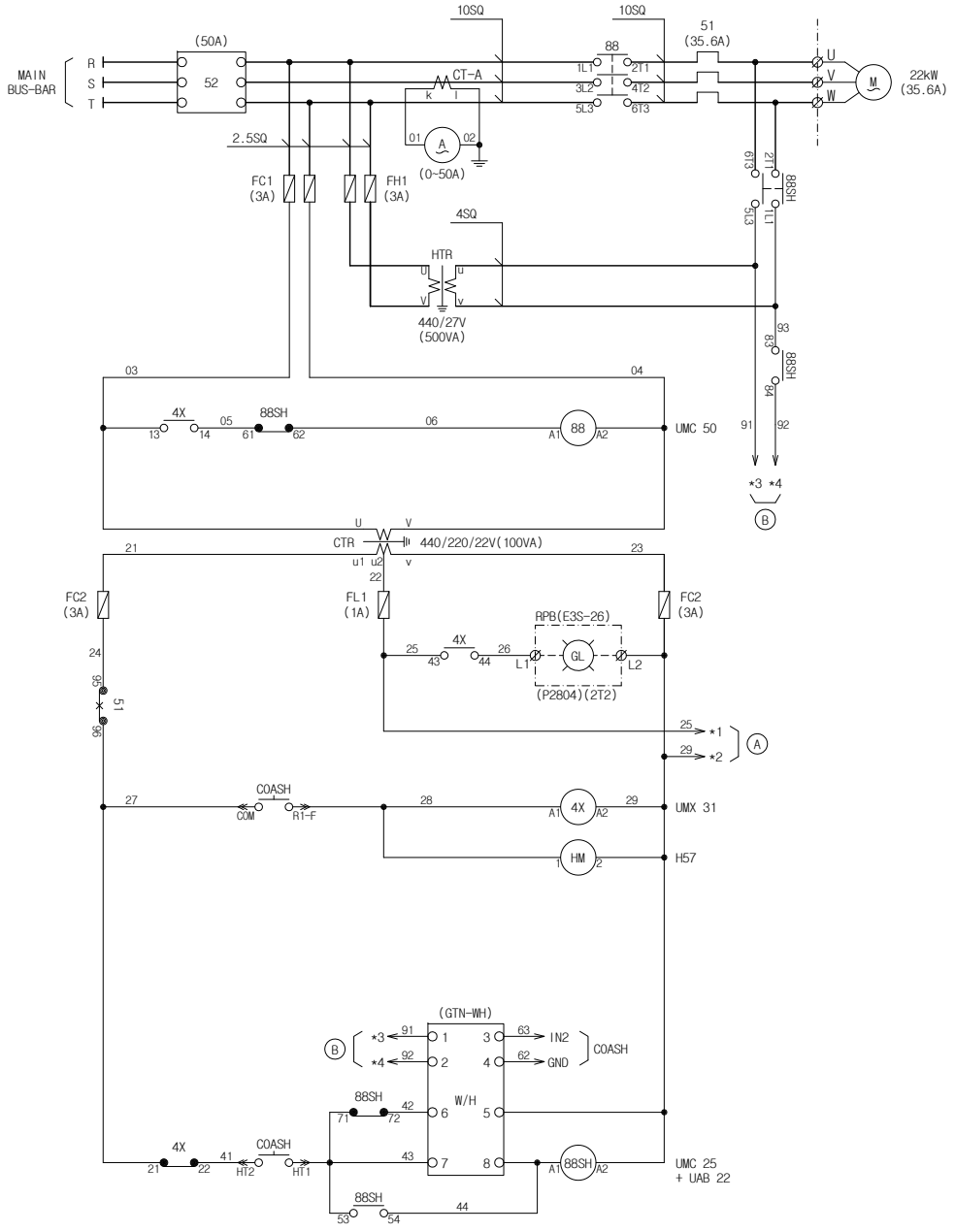

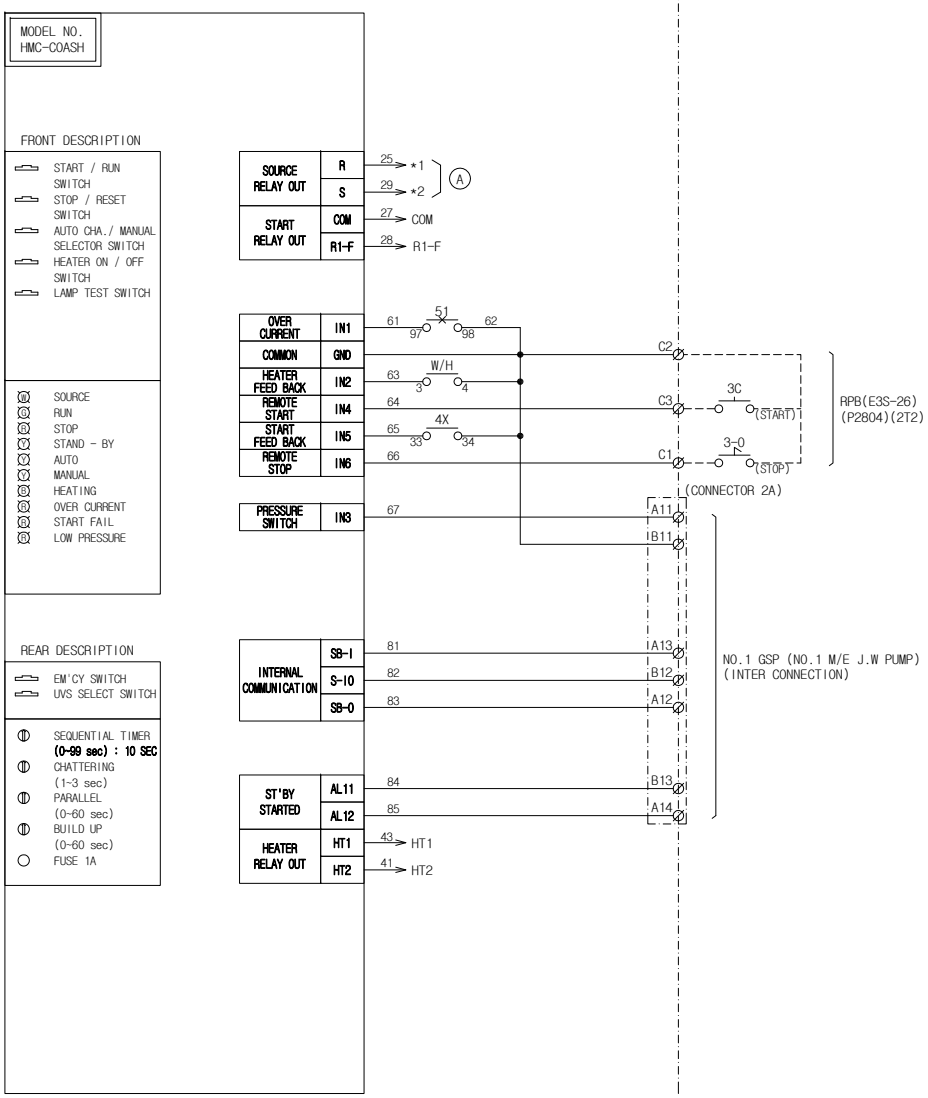

PROJECT No.	TITLE	
S5130		NO.2 M/E J.W PUMP (P2803)
HME	SHEET No.	SD204

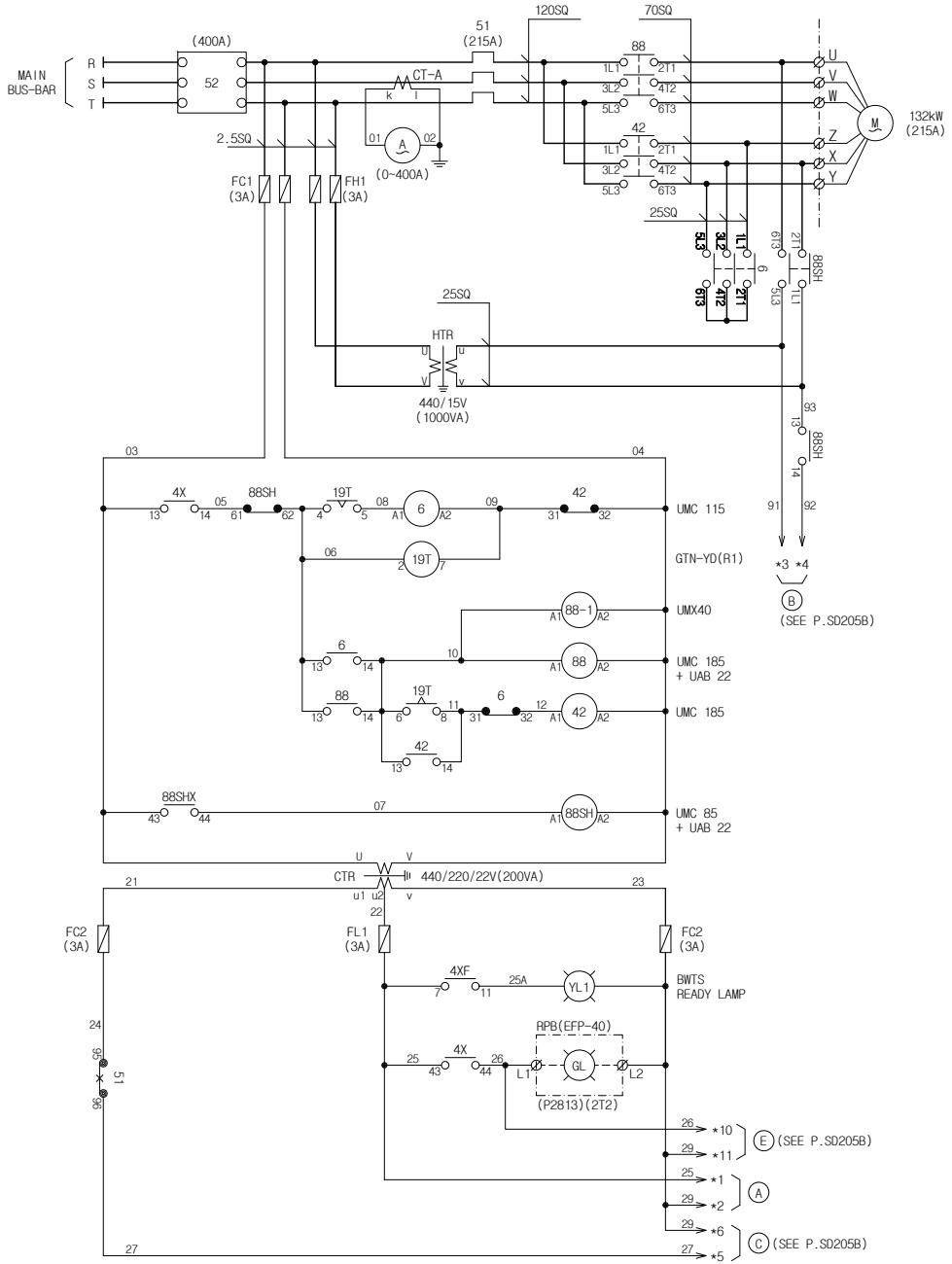

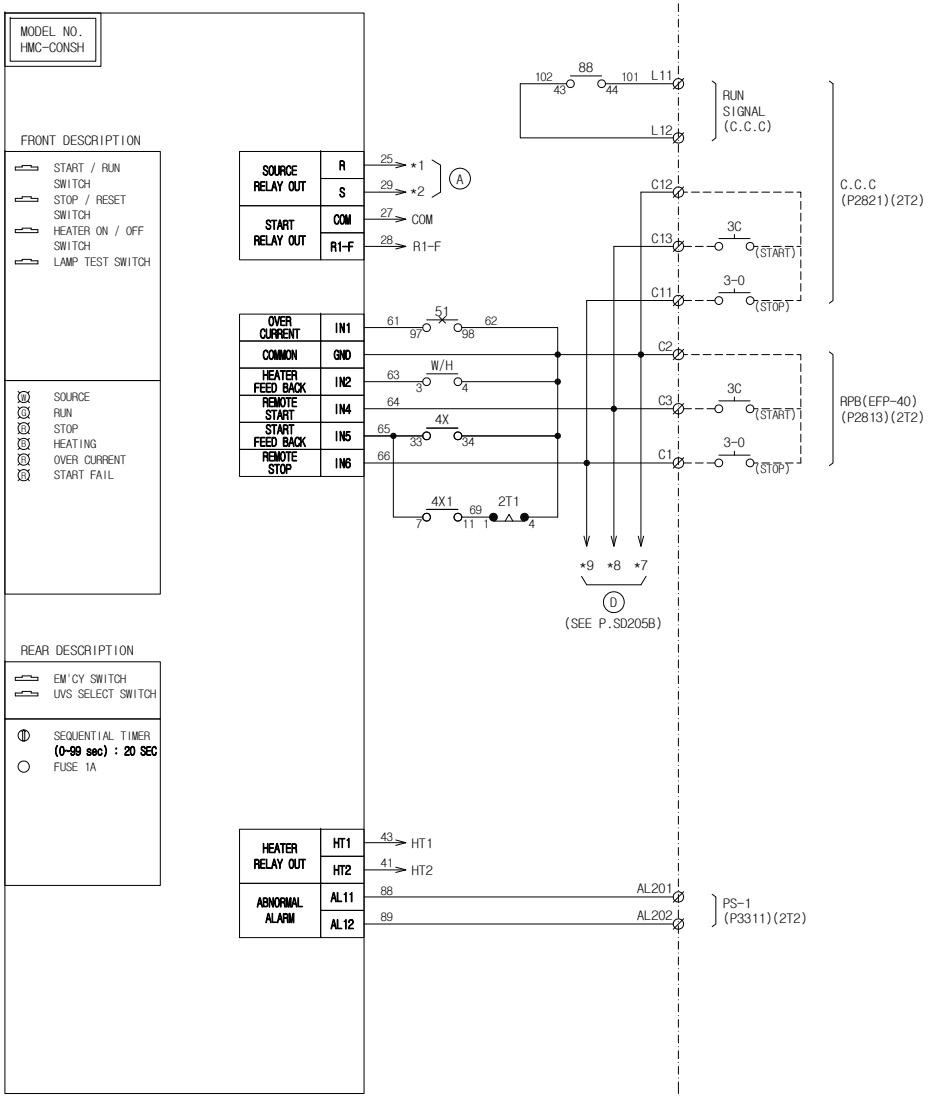

PROJECT No.	TITLE	NO.2 FIRE, BILGE & G/S PUMP (P2811,12)
S5130	SHEET No.	SD205A

HME

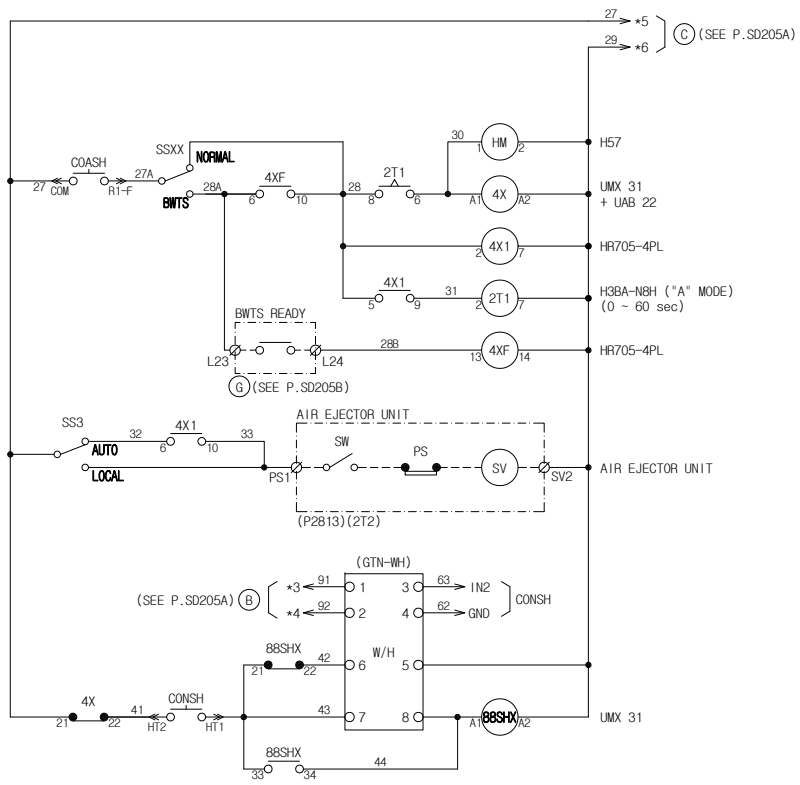

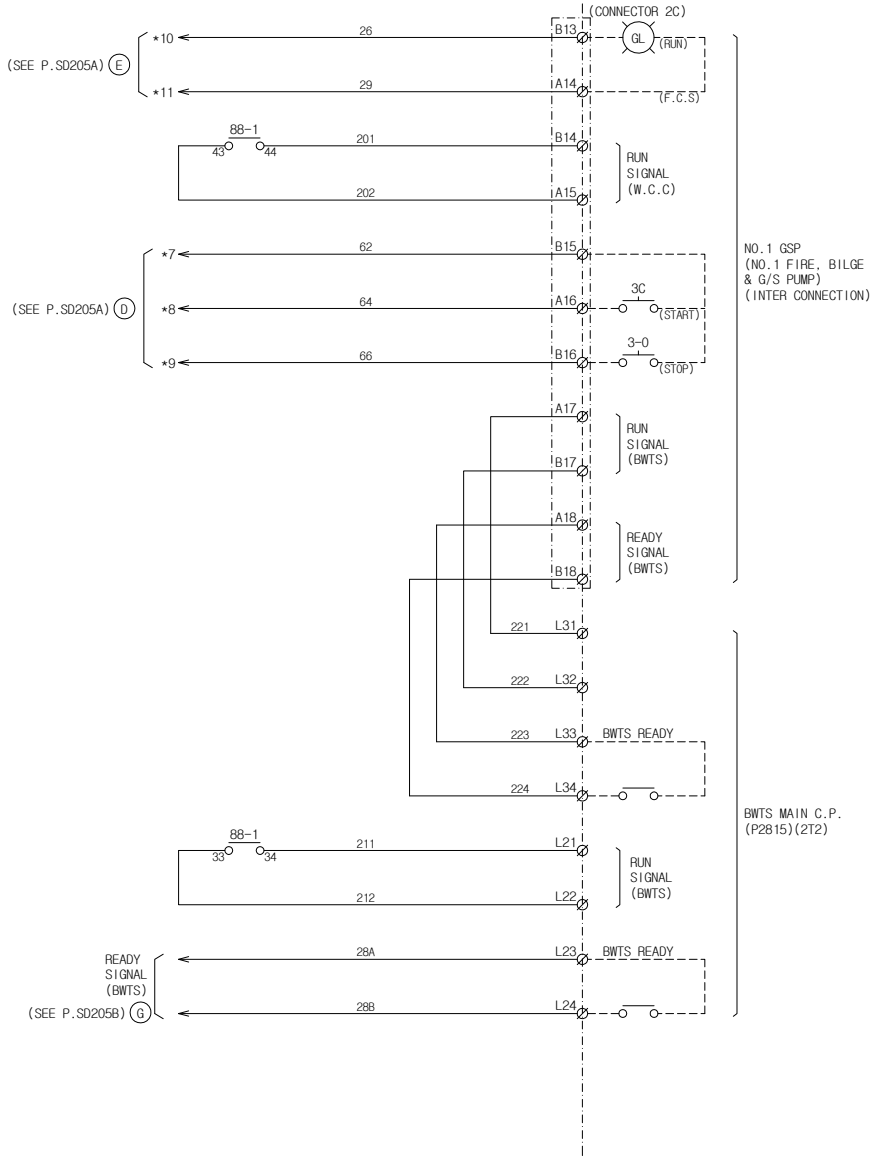

PROJECT No.	TITLE	
S5130	TITLE	NO.2 FIRE, BILGE & G/S PUMP (P2811,12)
HME	SHEET No.	SD205B

0	1	2	3	4	5
6	7	8	9	10	11

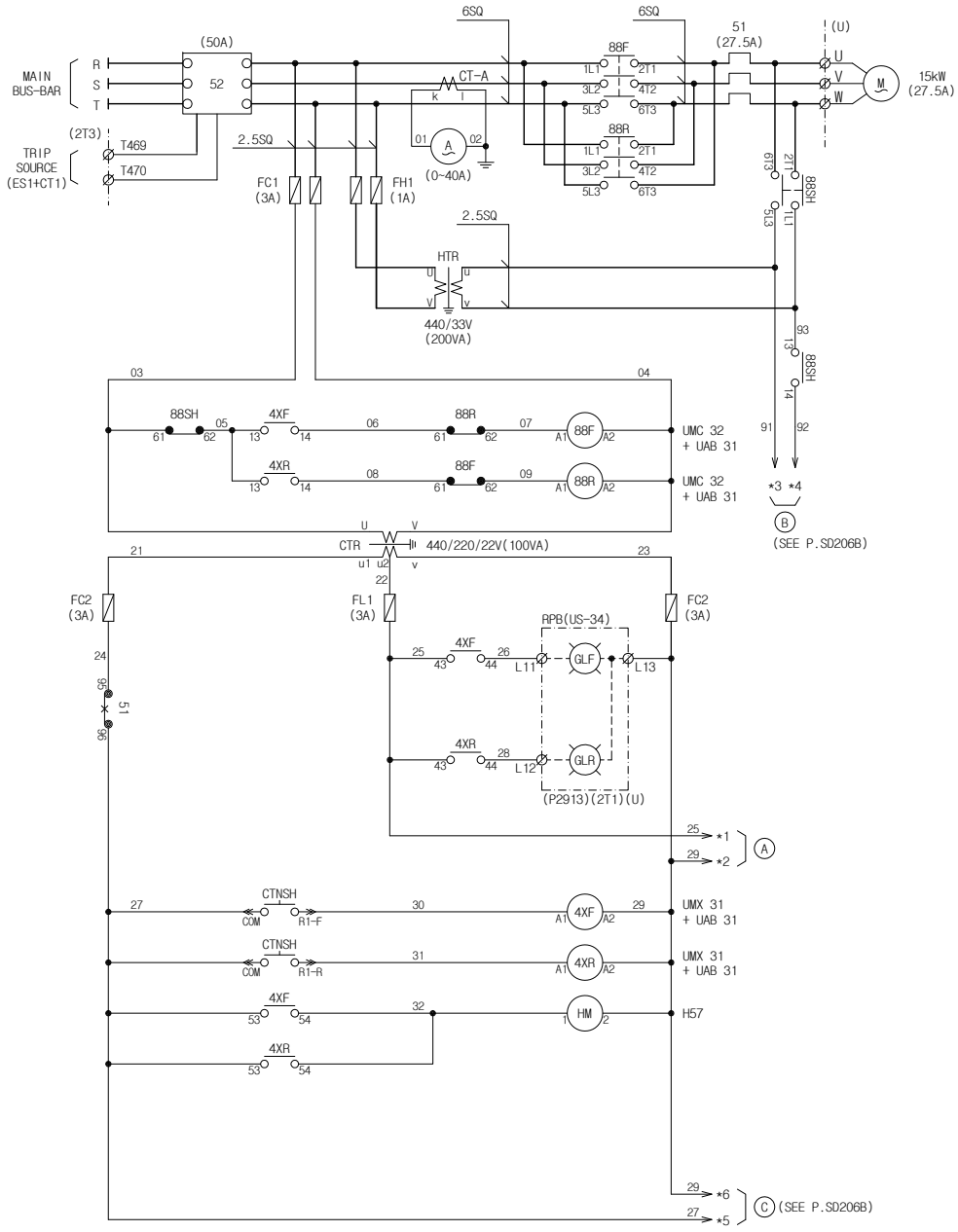

MODEL NO.
HMC-CTNSH

FRONT DESCRIPTION

- SUPPLY / RUN SWITCH
- EXHAUST / RUN SWITCH
- STOP / RESET SWITCH
- HEATER ON / OFF SWITCH
- LAMP TEST SWITCH

- SOURCE
- S RUN
- E RUN
- STOP
- HEATING
- OVER CURRENT
- START FAIL
- INTERVAL (S <-> E)

REAR DESCRIPTION

- EM'CY SWITCH
- UVS SELECT SWITCH

- SEQUENTIAL TIMER (0-99 sec) : 20 SEC
- DELAY TIME BETWEEN S AND E
- FUSE 1A

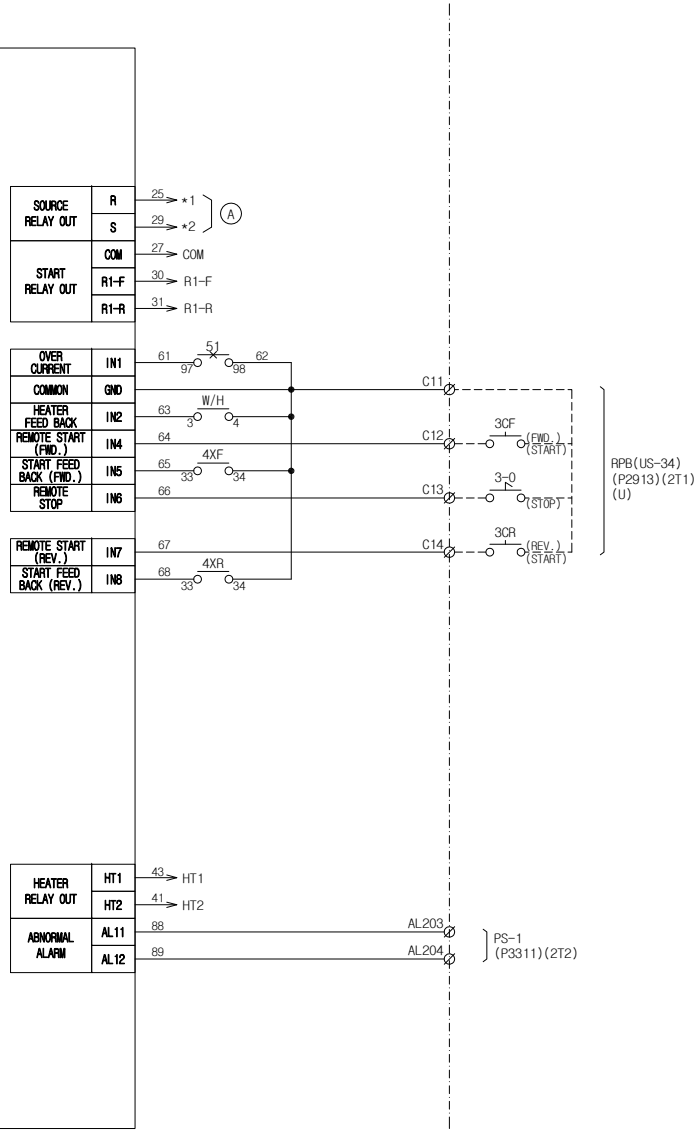

PROJECT No.	TITLE	
S5130	TITLE	NO.3 E/R SUPPLY/EXH. FAN (P2911)
HME	SHEET No.	SD206A

0	1	2	3	4	5
6	7	8	9	10	11

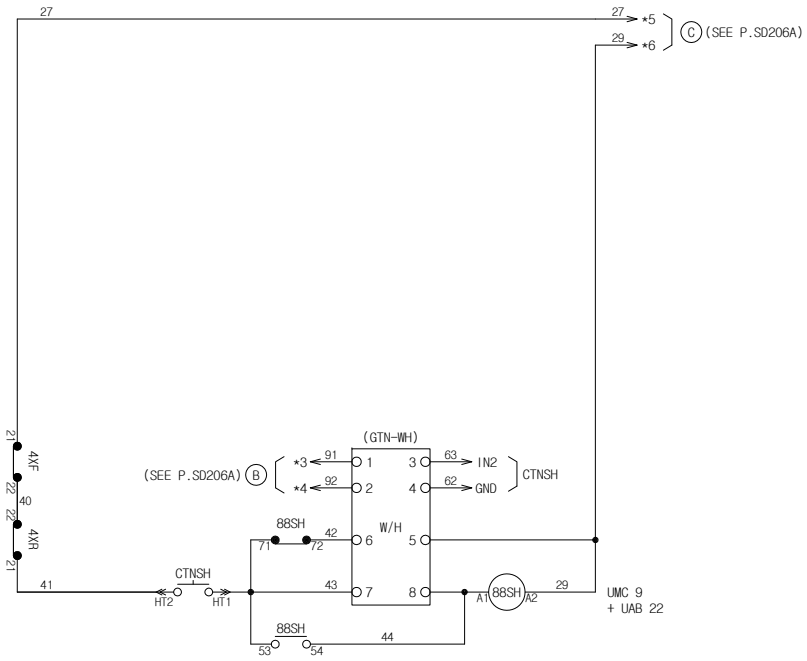

PROJECT No.	S5130	TITLE	NO.3 E/R SUPPLY/EXH. FAN (P2911)
	HME	SHEET No.	SD206B

0	1	2	3	4	5
6	7	8	9	10	11

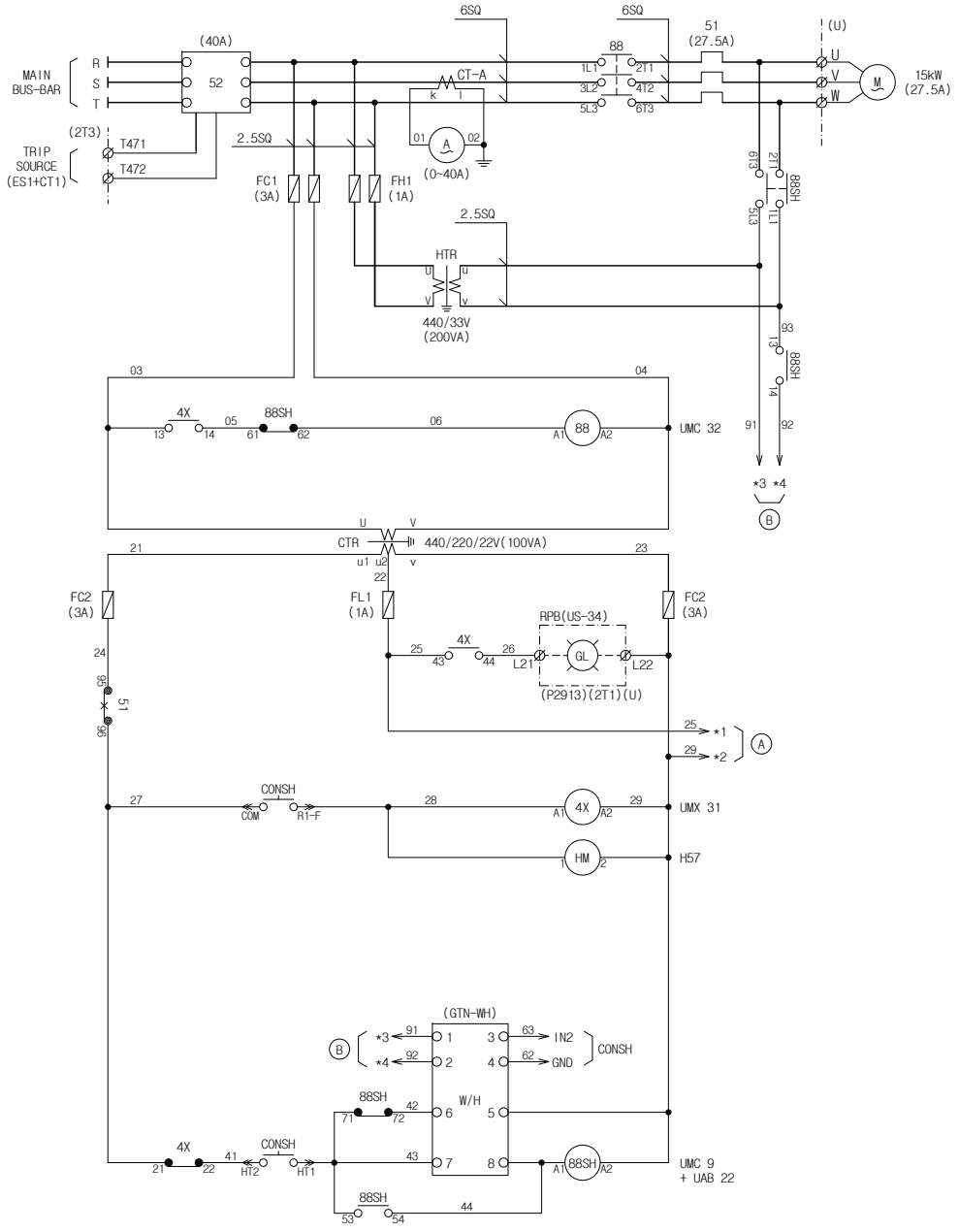

MODEL NO.
HMC-CONSH

FRONT DESCRIPTION

- START / RUN SWITCH
- STOP / RESET SWITCH
- HEATER ON / OFF SWITCH
- LAMP TEST SWITCH

- SOURCE
- RUN
- STOP
- HEATING
- OVER CURRENT
- START FAIL

REAR DESCRIPTION

- EM'CY SWITCH
- UVS SELECT SWITCH

- SEQUENTIAL TIMER (0-99 sec) : 20 SEC
- FUSE 1A

SOURCE RELAY OUT	R	25	*1
	S	29	*2
START RELAY OUT	COM	27	COM
	R1-F	28	R1-F
OVER CURRENT	IN1	61	51 (97, 98) 62
COMMON	GND		
HEATER FEED BACK	IN2	63	W/H (3, 4)
REMOTE START	IN4	64	C23 — 3C (START)
START FEED BACK	IN5	65	4X (33, 34)
REMOTE STOP	IN6	66	C21 — 3-0 (STOP)
HEATER RELAY OUT	HT1	43	HT1
	HT2	41	HT2
ABNORMAL ALARM	AL11	88	AL205
	AL12	89	AL206

C22, C23, C21 — RPB(US-34) (P2913)(2T1)(U)

AL205, AL206 — PS-1 (P3311)(2T2)

0	1	2	3	4	5	
6	7	8	9	10	11	

PROJECT No.	S5130	TITLE	NO.4 E/R SUPPLY FAN (P2912)
	HME	SHEET No.	SD207

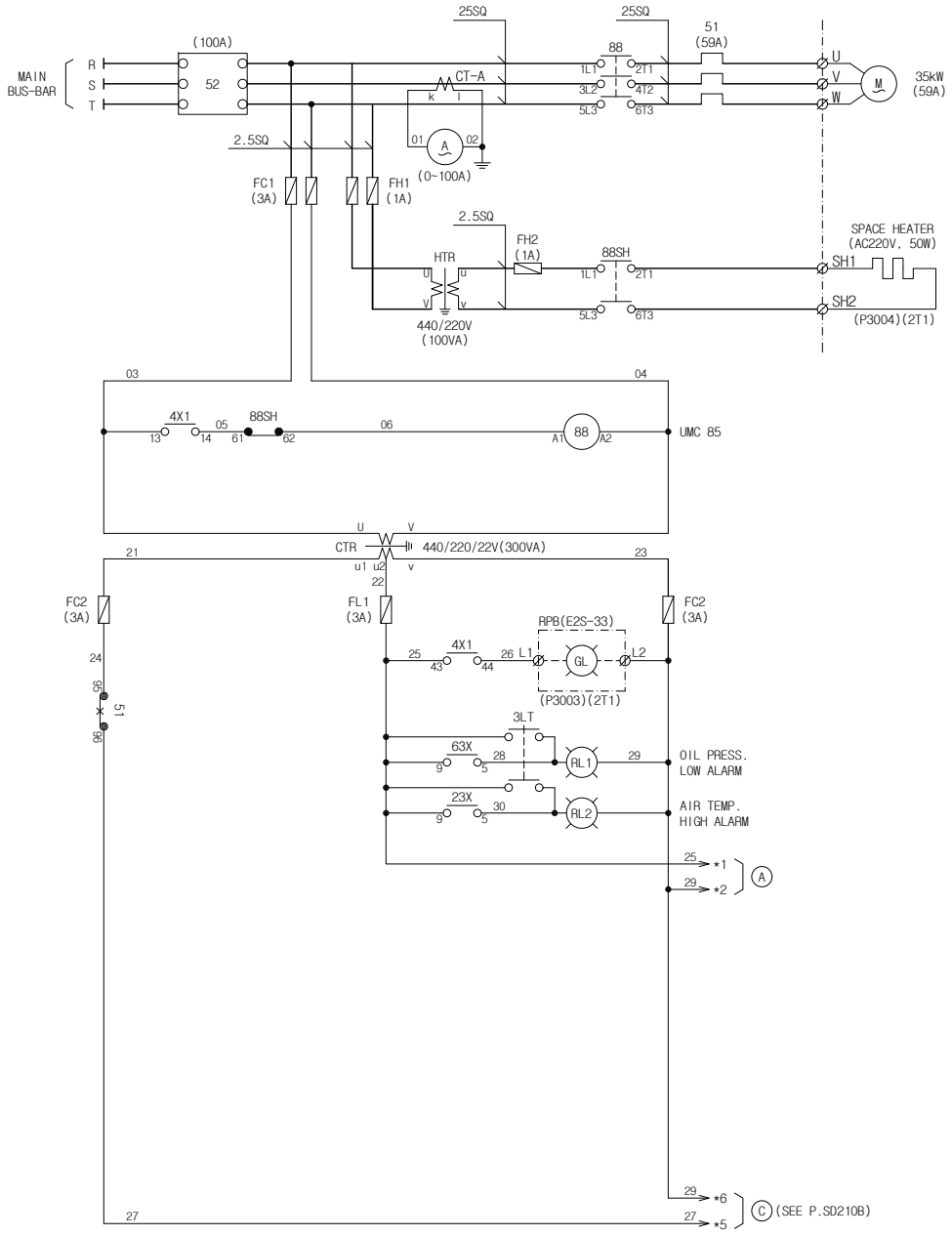

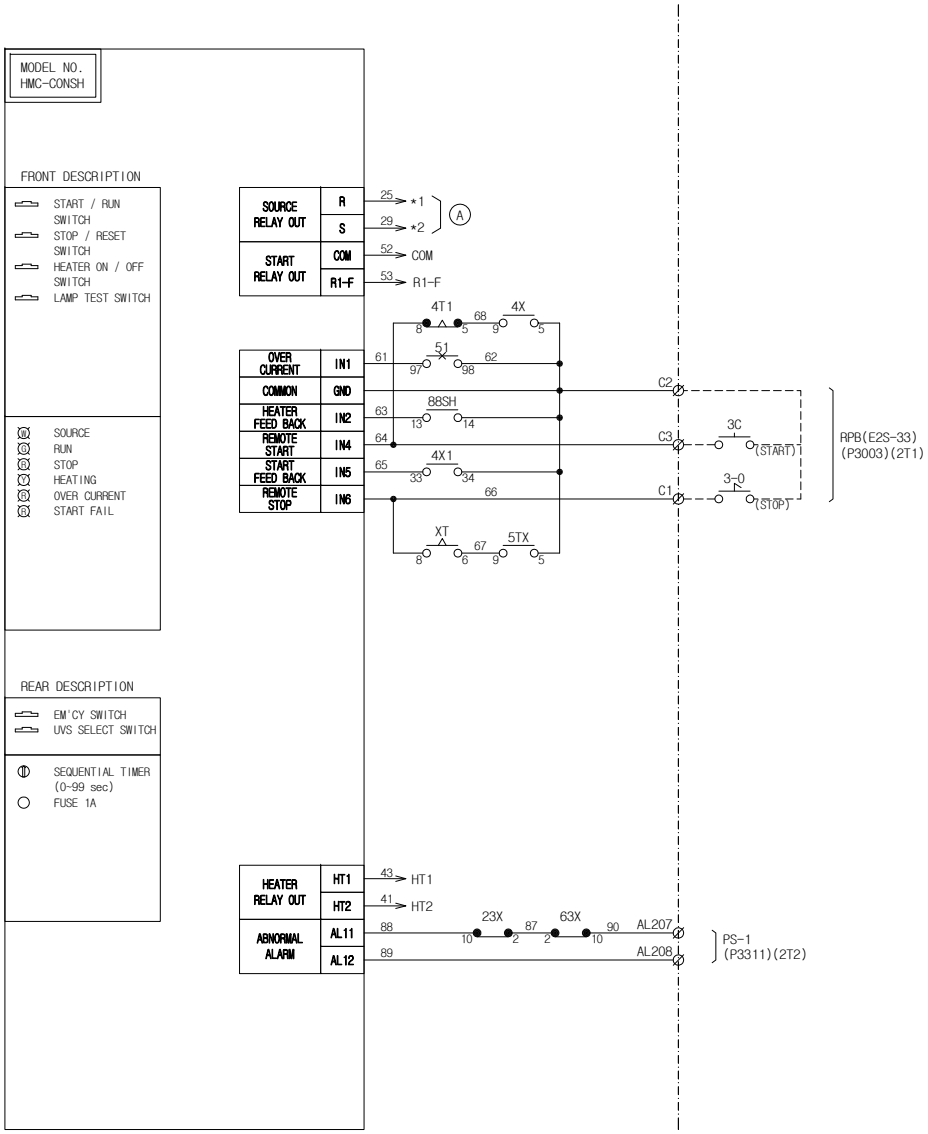

PROJECT No.	S5130	TITLE	NO.2 MAIN AIR COMPRESSOR (P3001)
	HME	SHEET No.	SD208A

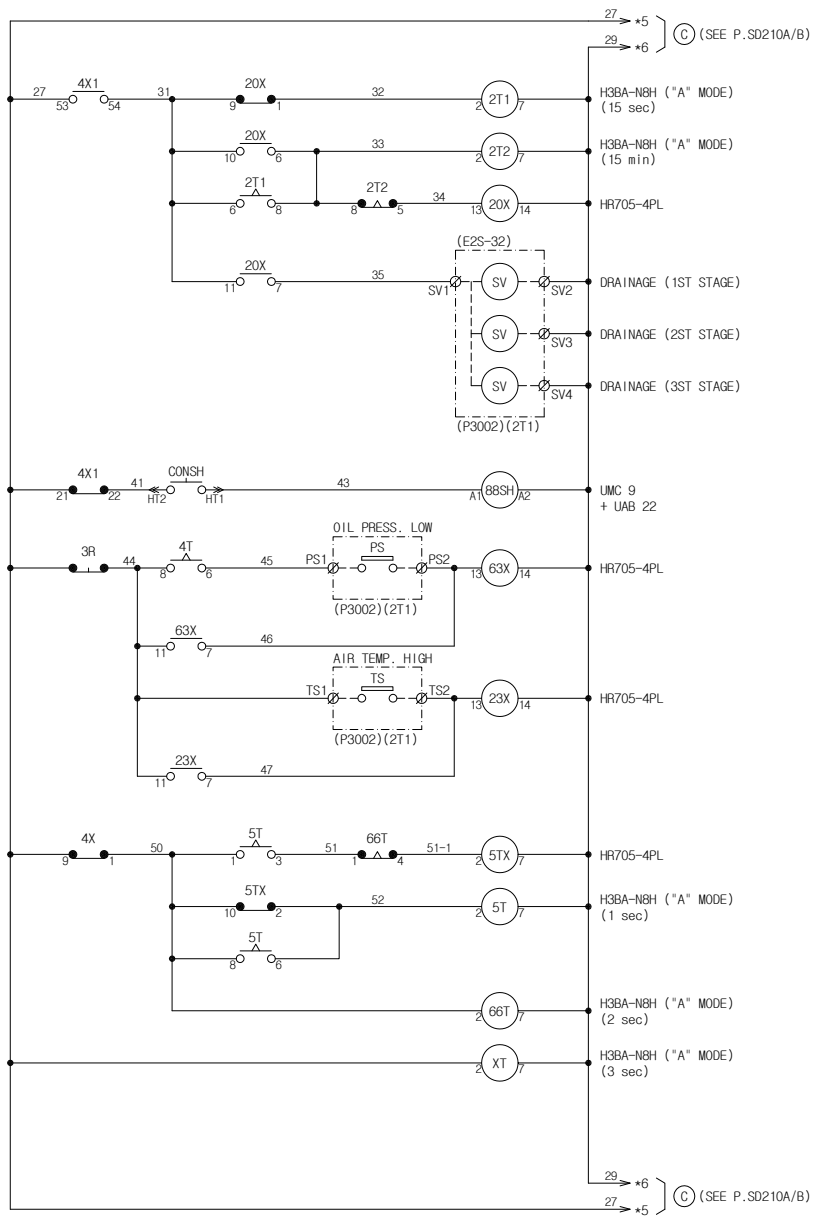

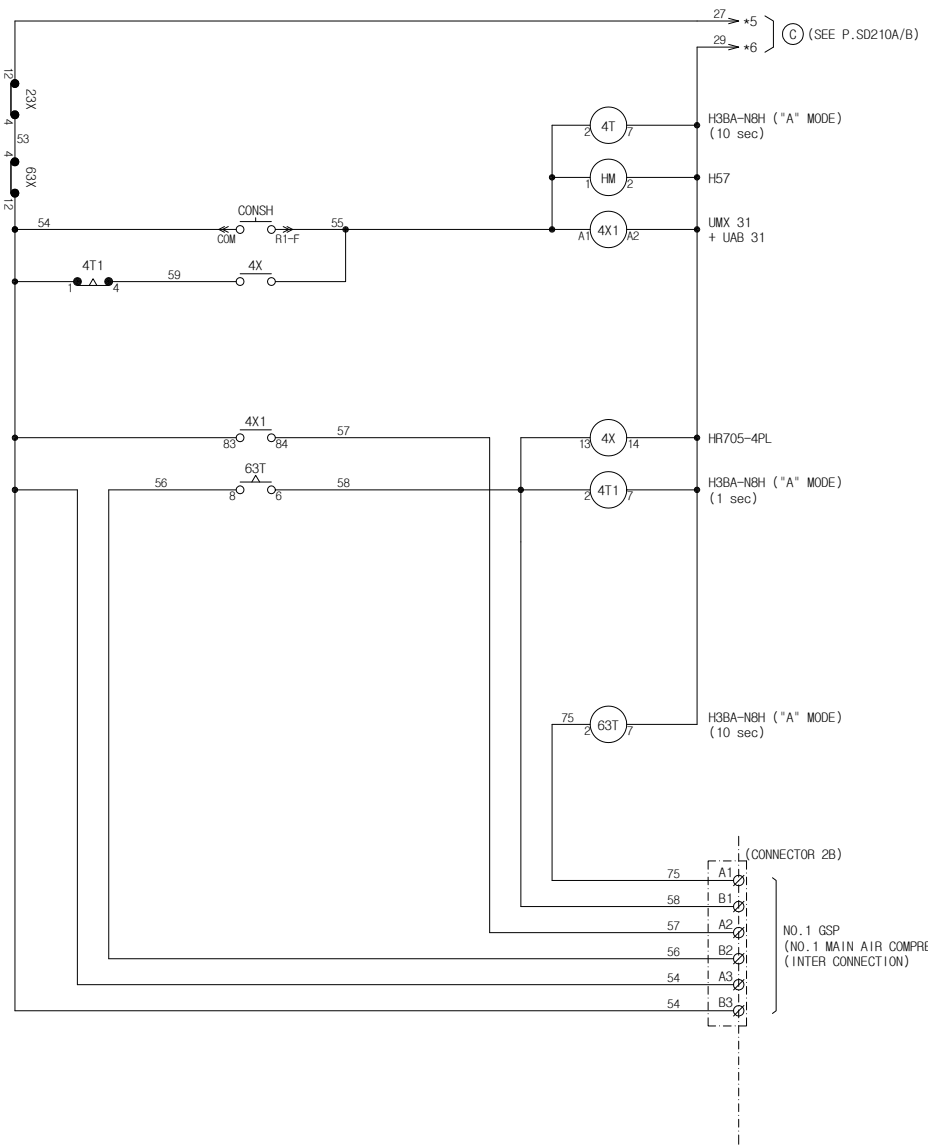

PROJECT No.	TITLE	NO.2 MAIN AIR COMPRESSOR (P3001)
S5130		
HME	SHEET No.	SD208B

0	1	2	3	4	5
6	7	8	9	10	11

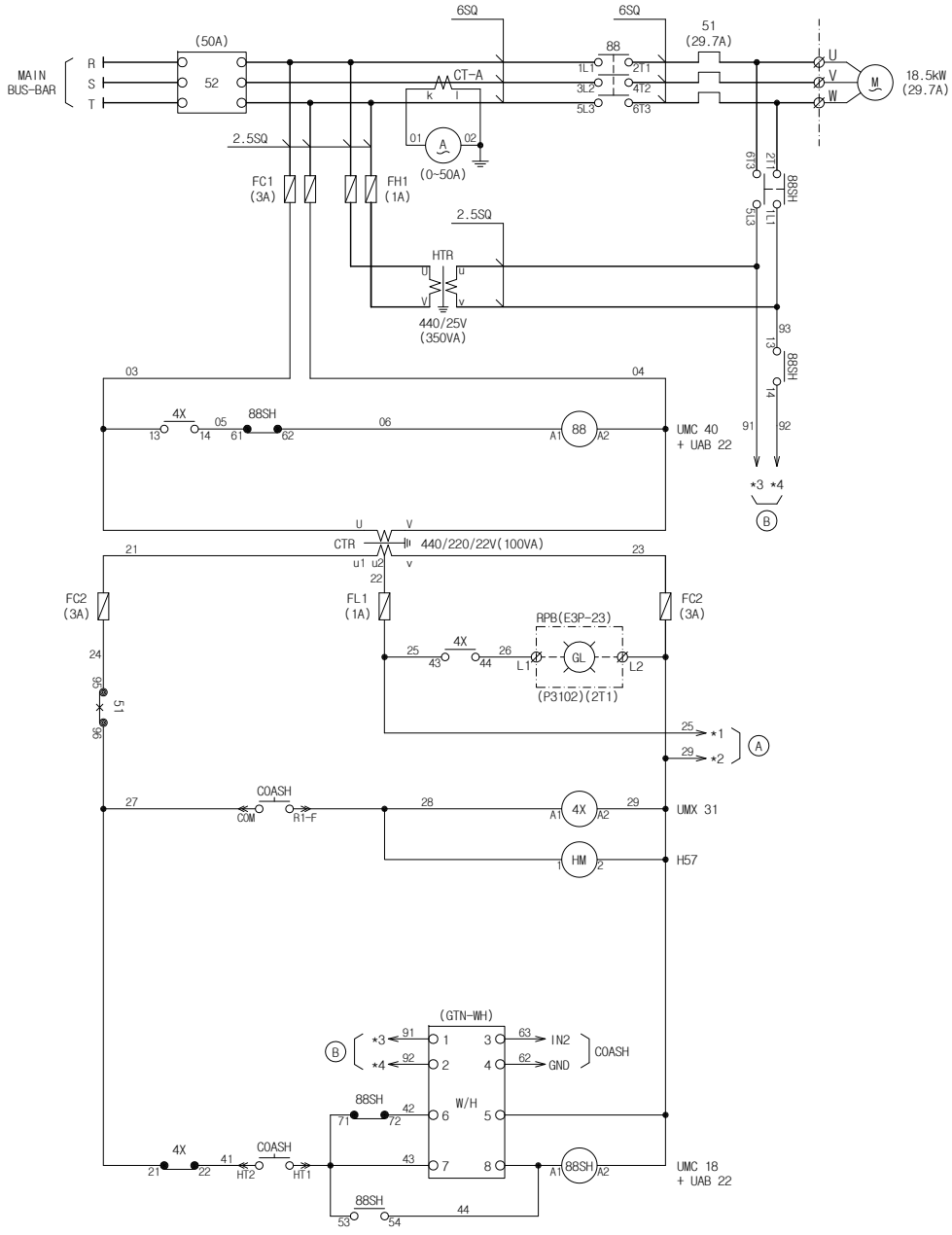

MODEL NO.
HMC-COASH

FRONT DESCRIPTION

- START / RUN SWITCH
- STOP / RESET SWITCH
- AUTO CHA./ MANUAL SELECTOR SWITCH
- HEATER ON / OFF SWITCH
- LAMP TEST SWITCH

- SOURCE
- RUN
- STOP
- STAND - BY
- AUTO
- MANUAL
- HEATING
- OVER CURRENT
- START FAIL
- LOW PRESSURE

REAR DESCRIPTION

- EM'CY SWITCH
- UVS SELECT SWITCH

- SEQUENTIAL TIMER (0-99 sec) : 15 SEC
- CHATTERING (1-3 sec)
- PARALLEL (0-60 sec)
- BUILD UP (0-60 sec)
- FUSE 1A

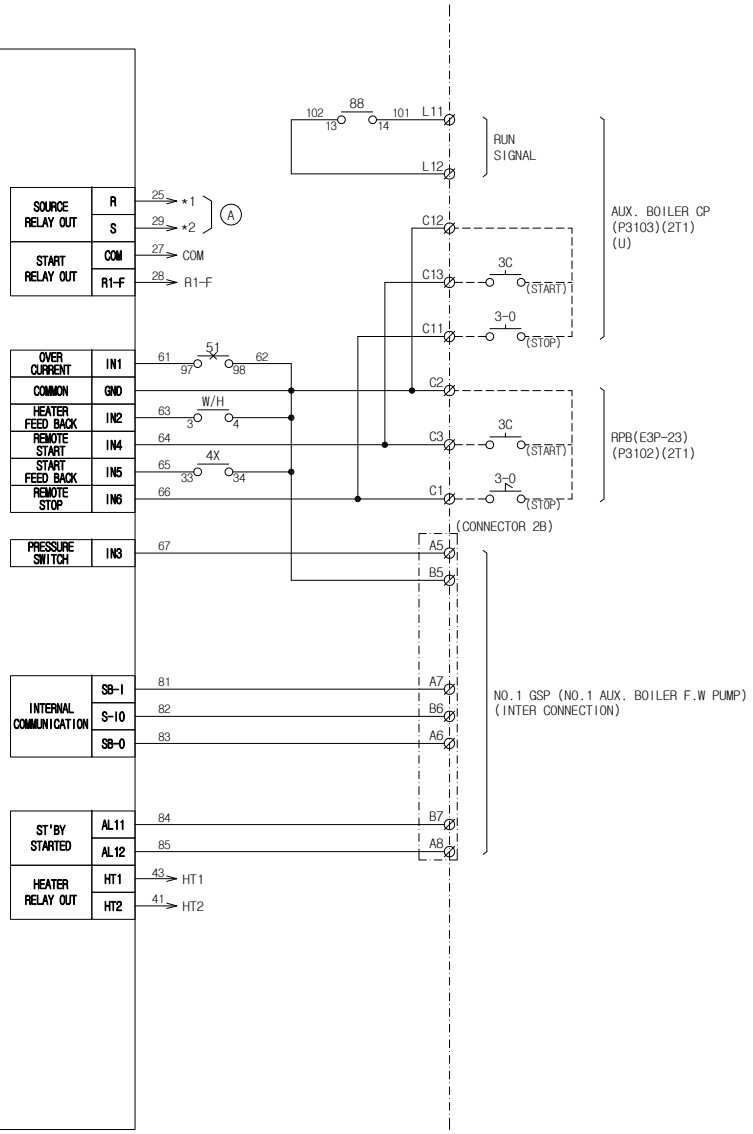

PROJECT No.	TITLE	NO.2 AUX. BOILER FEED WATER PUMP (P3101)
S5130	SHEET No.	SD209

HME

0	1	2	3	4	5
6	7	8	9	10	11

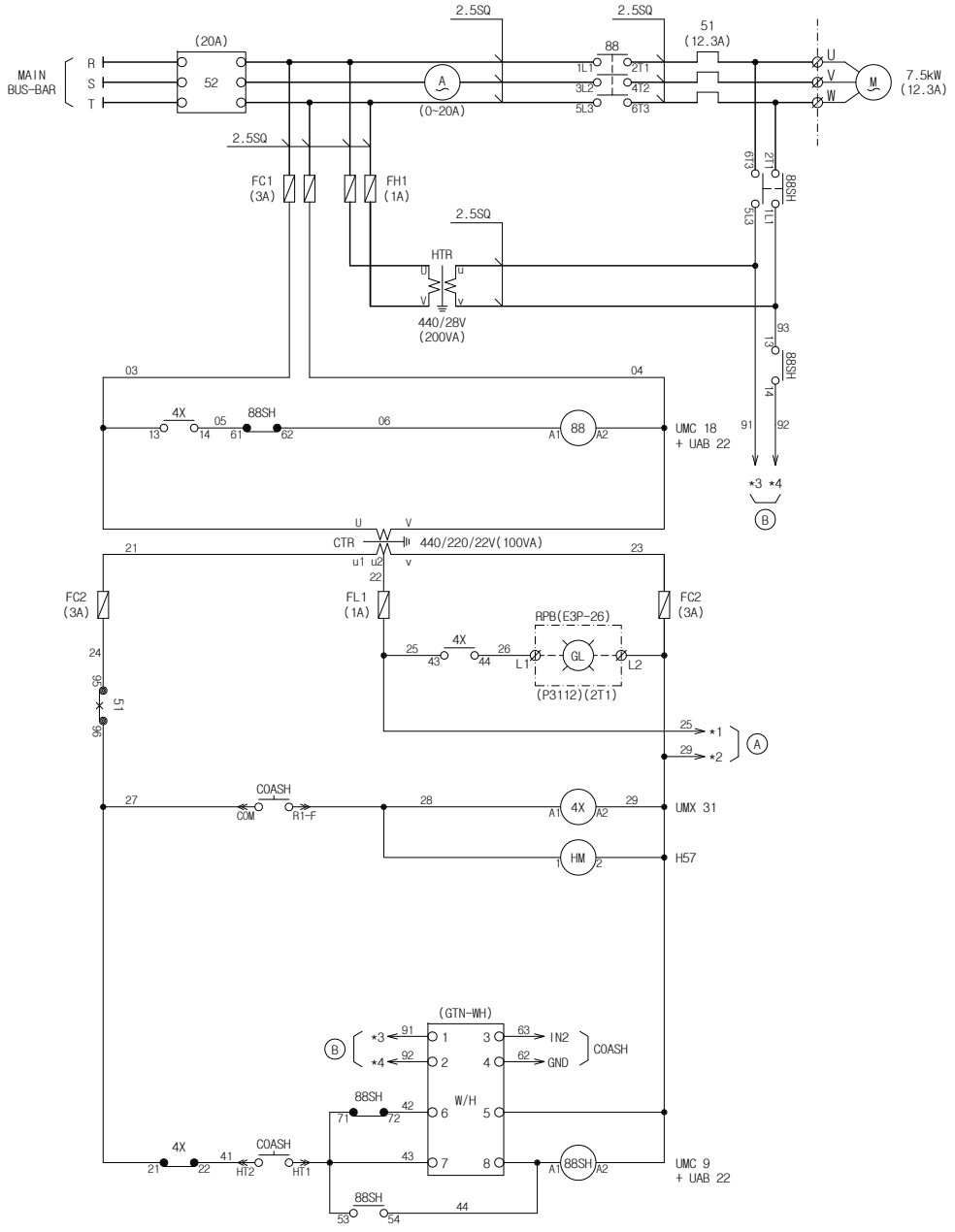

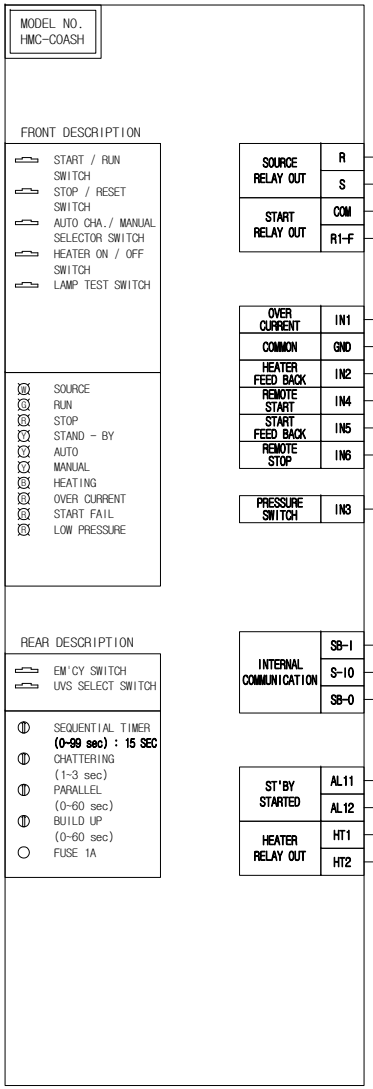

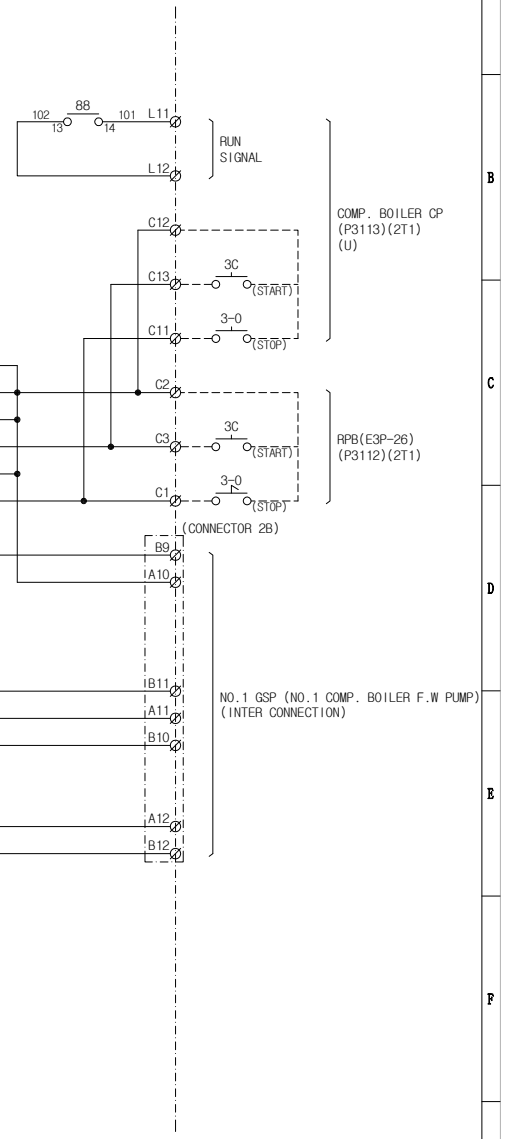

PROJECT No.	TITLE	NO.2 COMP. BOILER FEED WATER PUMP (P3111)
S5130	SHEET No.	SD210

HME

0	1	2	3	4	5
6	7	8	9	10	11

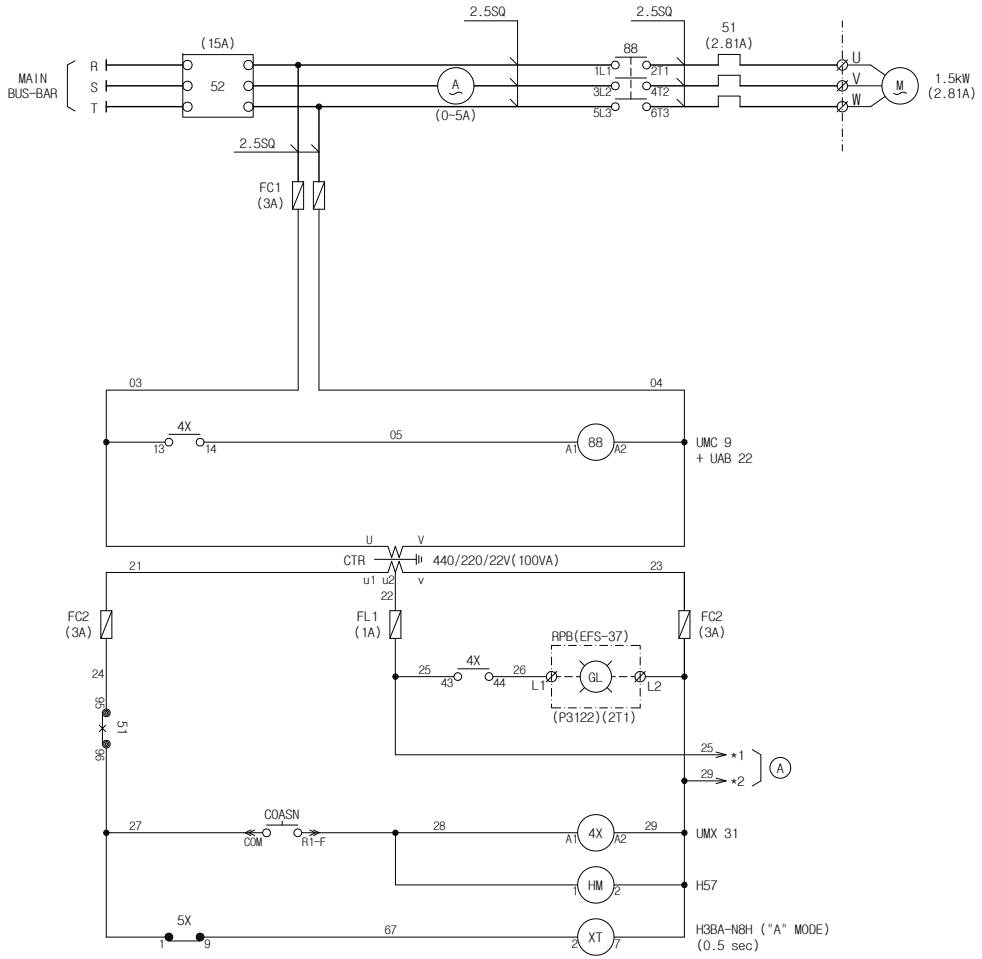

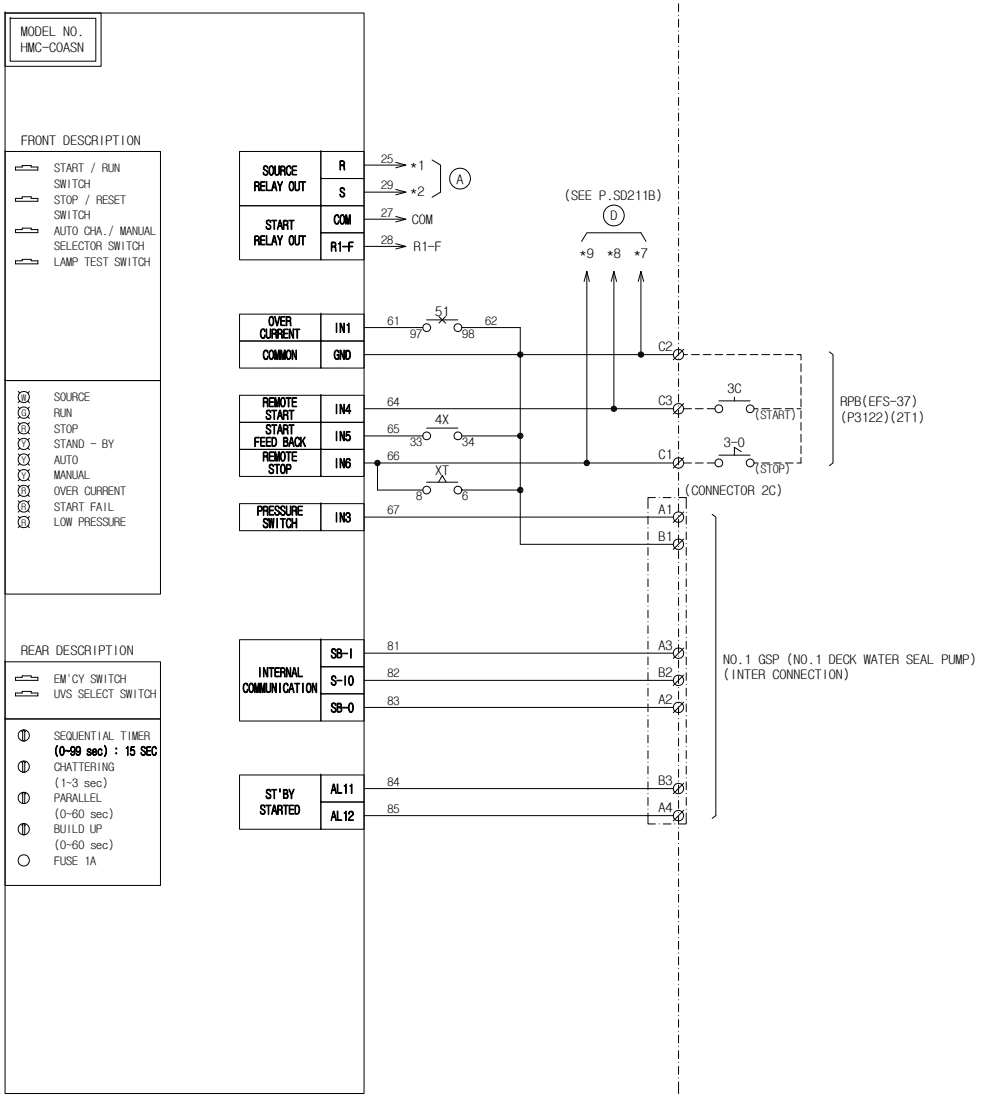

PROJECT No.	TITLE	NO.2 DECK WATER SEAL PUMP (P3121)
S5130	SHEET No.	SD211A

HME

0	1	2	3	4	5
6	7	8	9	10	11

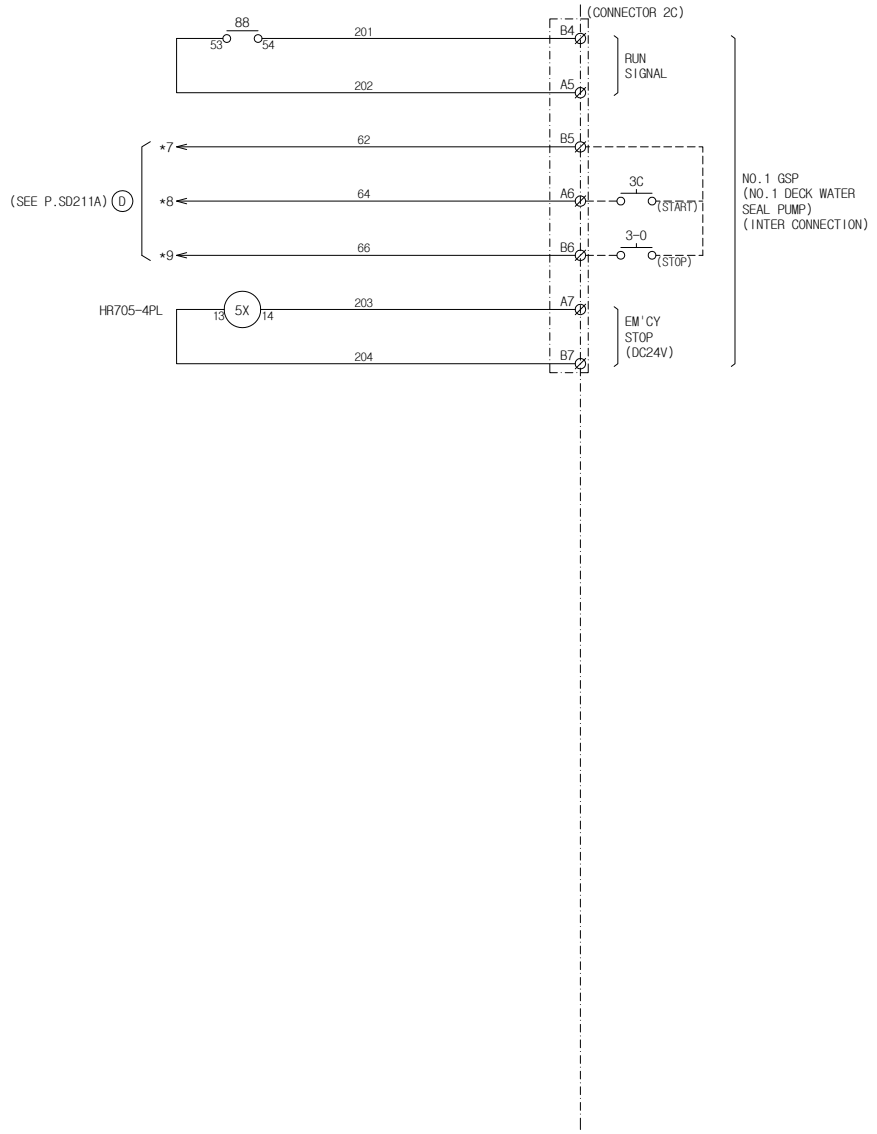

PROJECT No.	S5130	TITLE	NO.2 DECK WATER SEAL PUMP (P3121)
	HME	SHEET No.	SD211B

0	1	2	3	4	5
6	7	8	9	10	11

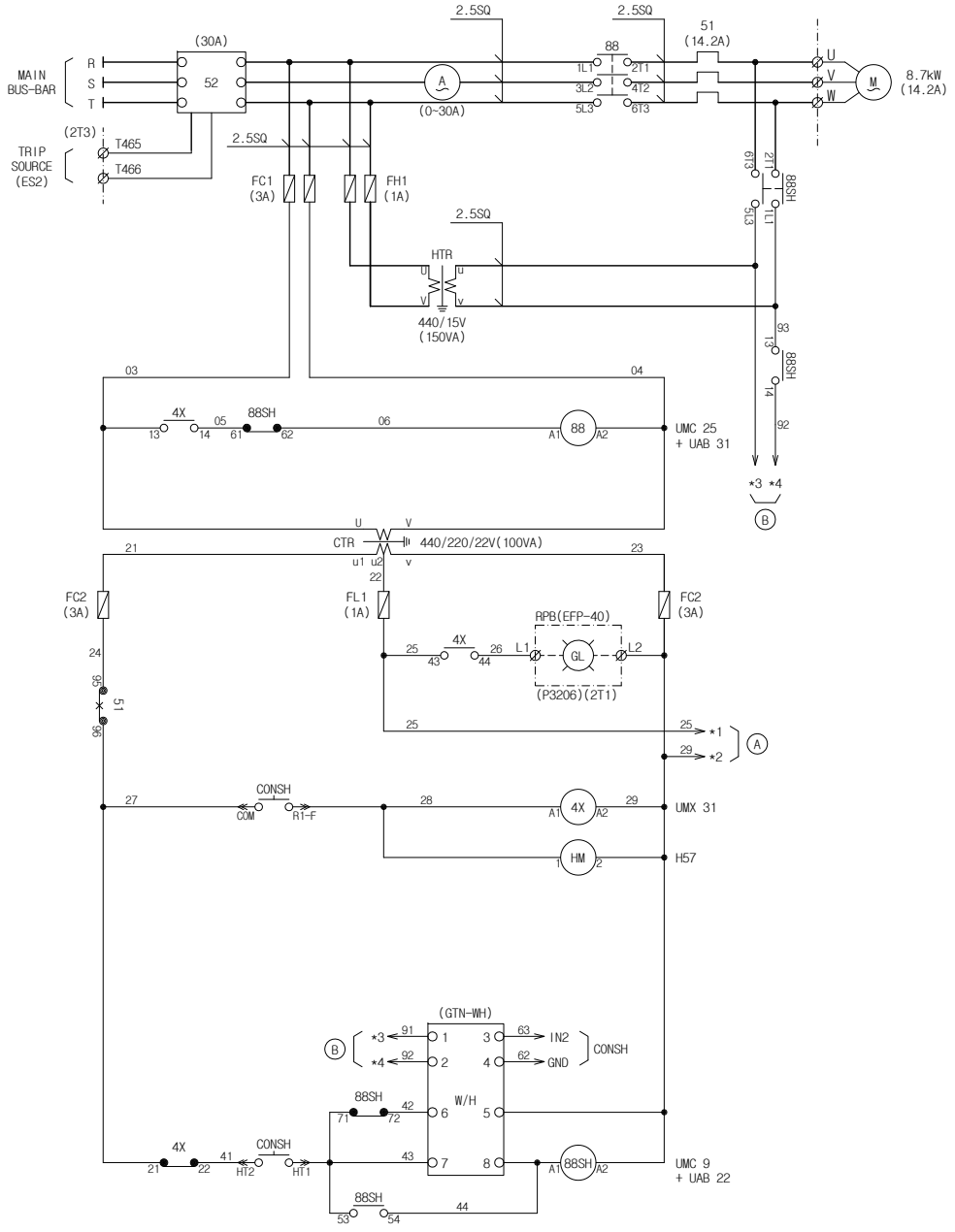

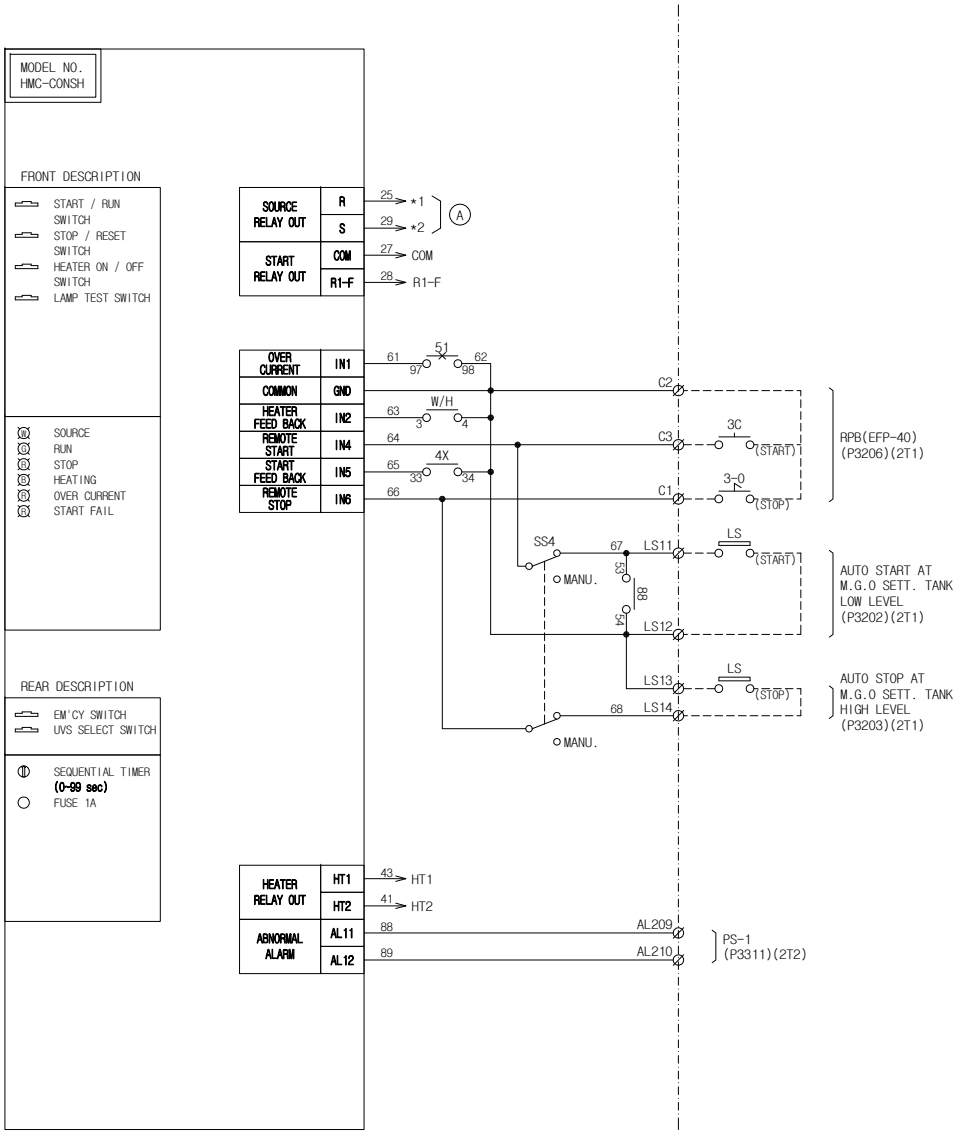

PROJECT No.	TITLE	
S5130	M.G.O TRANS. PUMP (P3201)	
HME	SHEET No.	SD212

0	1	2	3	4	5
6	7	8	9	10	11

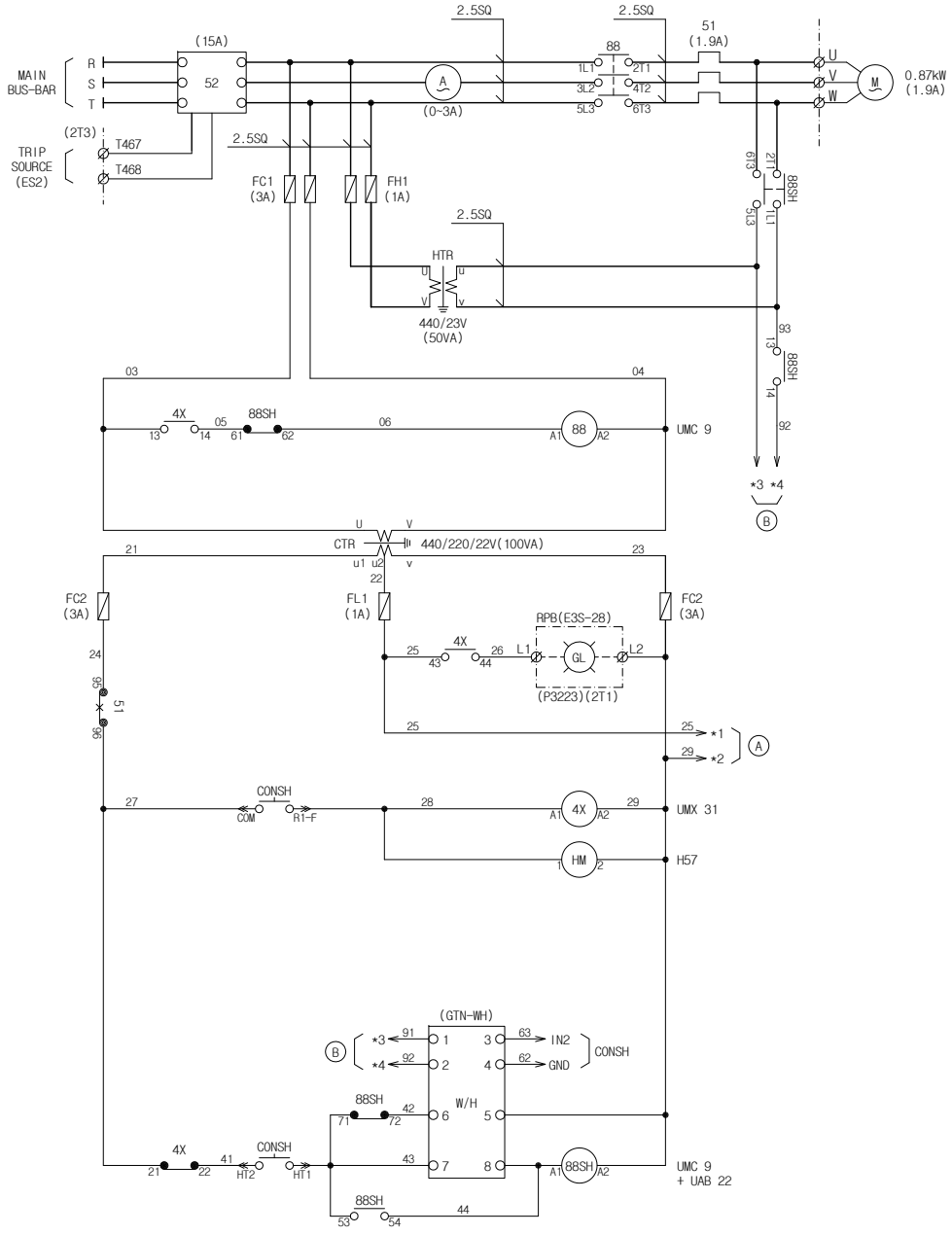

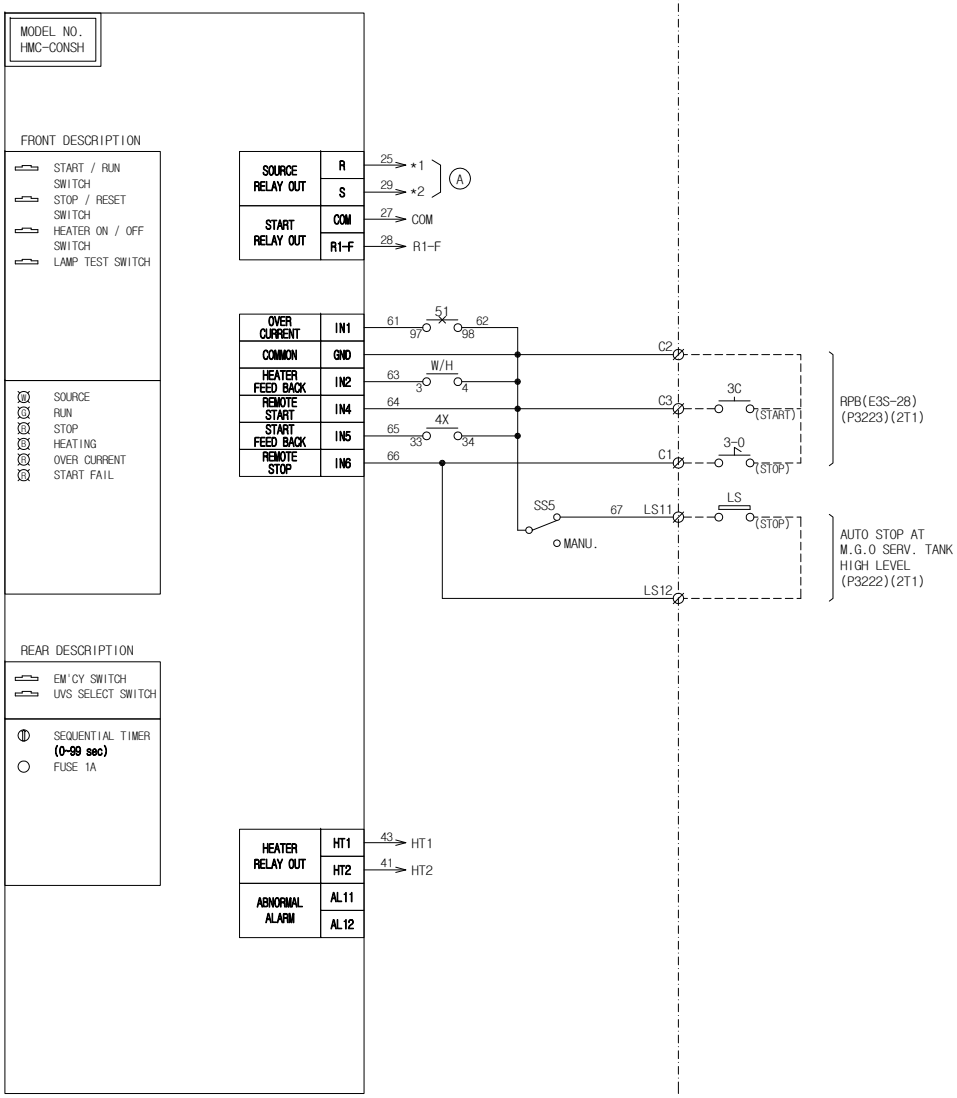

PROJECT No.	TITLE	
S5130	TITLE	M.G.O SHIFTING PUMP (P3221)
HME	SHEET No.	SD213

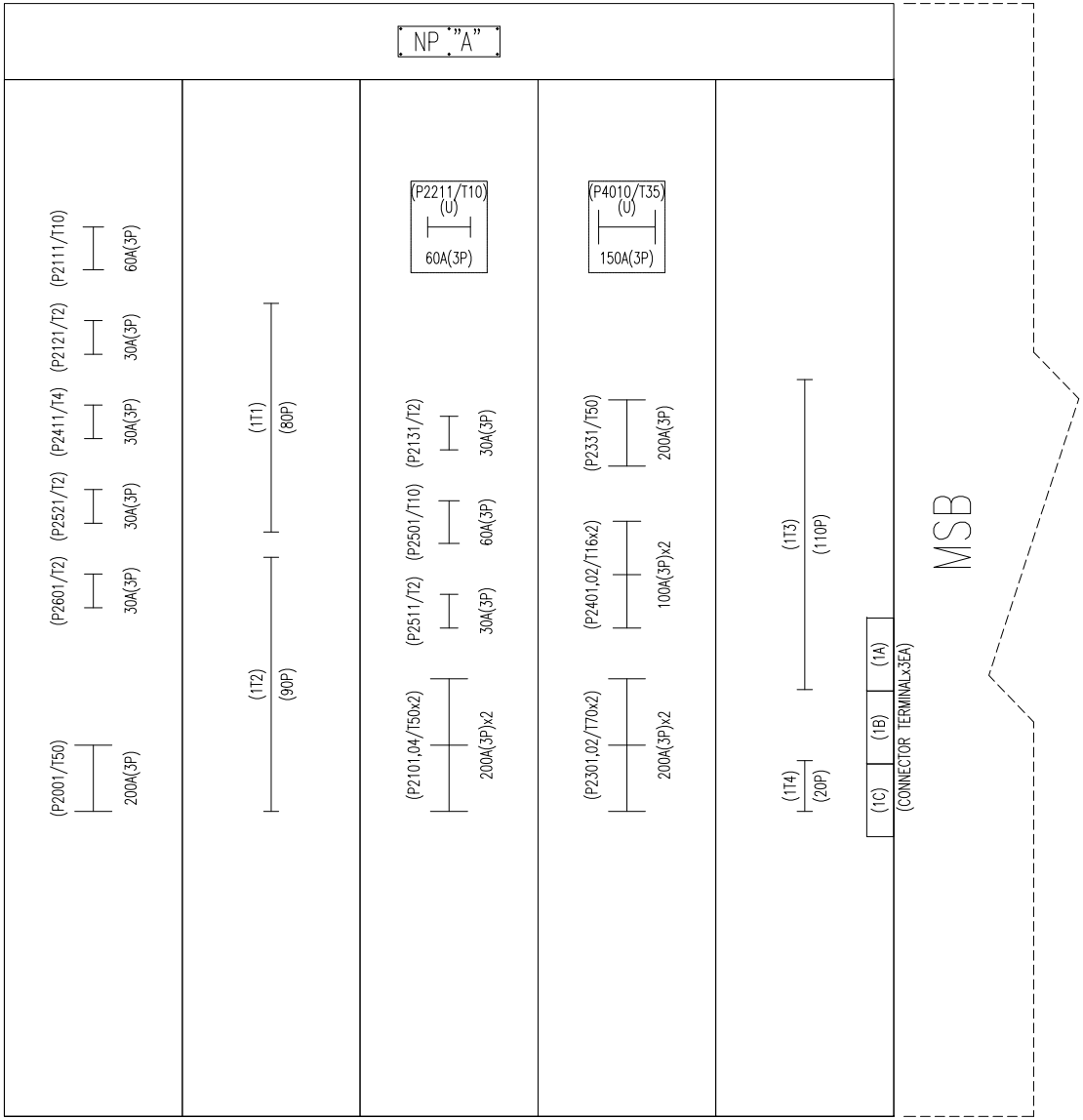

REAR VIEW

PROJECT No. S5130			TITLE	TERMINAL ARRANGEMENT (NO.1 GROUP STARTER PANEL)	
HME			SHEET No.	T01	

0	1	2	3	4	5
6	7	8	9	10	11

NO.1 GSP

	1T1			
P2211 (SEE. SD106A)	26	L1	1	P2212 (MC12) (U)
	29	L2	2	
	62	C2	3	
	64	C3	4	
	66	C1	5	
INTER CONN. (SEE. SD106B)	201	L11	6	
	202	L12	7	
	203	L13	8	
	204	C11	9	
	205	C12	10	
	206	C13	11	
	207	C14	12	
	201	L21	1	P4303 (MC7) (U)
	202	L22	2	
	203	L23	3	
	204	C21	4	
	205	C22	5	
	206	C23	6	
	207	C24	7	
P2501 (SEE. SD111)	26	L1	1	P2502 (MC7)
	29	L2	2	
	62	C2	3	
	64	C3	4	
	66	C1	5	
	67	PS11	6	
	62	PS12	7	
	101	L11	1	P2504 (MC7) (U)
	102	L12	2	
	62	C12	3	
	64	C13	4	
	66	C11	5	
P2511 (SEE. SD112)	26	L1	1	P2512 (MC7)
	29	L2	2	
	62	C2	3	
	64	C3	4	
	66	C1	5	
	67	PS11	6	
	62	PS12	7	

NO.1 GSP

	1T1			
	101	L11	1	P2514 (MC7) (U)
	102	L12	2	
	62	C12	3	
	64	C13	4	
	66	C11	5	
P2131 (SEE. SD105)	26	L1	1	P2132 (MC7)
	29	L2	2	
	62	C2	3	
	64	C3	4	
	66	C1	5	
P2111 (SEE. SD103)	26	L1	1	P2112 (MC12)
	29	L2	2	
	62	C2	3	
	64	C3	4	
	66	C1	5	
	67	PS11	6	
	62	PS12	7	
P2121 (SEE. SD104)	26	L1	1	P2122 (MC7)
	29	L2	2	
	62	C2	3	
	64	C3	4	
	66	C1	5	
SPARE				

YARD CABLE No.
YARD CABLE CORE No.
TERMINAL No.
INTERNAL CABLE No.
CIRCUIT No.

PROJECT No.	TITLE	
S5130		TERMINAL ARRANGEMENT (NO.1 GROUP STARTER PANEL)
HME	SHEET No.	T02

0	1	2	3	4	5
6	7	8	9	10	11

NO.1 GSP

	1T2			
P2411 (SEE. SD110)	67	LS11	1	P2412 (MC2)
	62	LS12	2	
	62	LS13	1	P2413 (MC2)
	68	LS14	2	
	69	LS21	1	P2414 (MC2)
	62	LS22	2	
	62	LS23	1	P2415 (MC2)
	70	LS24	2	
	26	L1	1	P2416 (MC7)
	29	L2	2	
	62	C2	3	
	64	C3	4	
	66	C1	5	
P2521 (SEE. SD113A)	26	L1	1	P2522 (MC7)
	29	L2	2	
	62	C2	3	
	64	C3	4	
	66	C1	5	
	67	PS11	6	
	62	PS12	7	
P2601 (SEE. SD114)	26	L1	1	P2602 (MC7)
	29	L2	2	
	62	C2	3	
	64	C3	4	
	66	C1	5	
	67	PS11	6	
	62	PS12	7	
P2001 (SEE. SD101A ~SD101B)	26	L1	1	P2002 (MC7)
	29	L2	2	
	62	C2	3	
	64	C3	4	
	66	C1	5	
	67	PS11	6	
	62	PS12	7	
	201	L11	1	P2005 (MC4)
	202	L12		
INTER CONN. FOR P2601 (SEE. SD101B , SD201B)	202	L21		
	204	L22	2	

YARD CABLE No.

YARD CABLE CORE No.

TERMINAL No.

INTERNAL CABLE No.

CIRCUIT No.

NO.1 GSP

	1T2			
P2101,04 (SEE. SD102A)	26	L1	1	P2102 (MC12)
	29	L2	2	
	62	C2	3	
	64	C3	4	
	66	C1	5	
	67	PS11	6	
	62	PS12	7	
P2001 – ST'BY STA (SEE. SD101A)	86	AL101	1	P2611 (MC37)
	85	AL102	2	
P2101,04 – ST'BY STA (SEE. SD102A)	86	AL103	3	
	85	AL104	4	
P2111 – ST'BY STA (SEE. SD103)	86	AL105	5	
	85	AL106	6	
P2211 – ABNORMAL (SEE. SD106A)	88	AL107	7	
	89	AL108	8	
P2301,02 – ABNORMAL (SEE. SD107A)	88	AL109	9	
	89	AL110	10	
P2331 – ABNORMAL (SEE. SD108A)	88	AL111	11	
	89	AL112	12	
P2401,02 – ABNORMAL (SEE. SD109A)	90	AL113	13	
	89	AL114	14	
P2411 – ABNORMAL (SEE. SD110)	88	AL115	15	
	89	AL116	16	
P2501 – ST'BY STA (SEE. SD111)	86	AL117	17	
	85	AL118	18	
P2511 – ST'BY STA (SEE. SD112)	86	AL119	19	
	85	AL120	20	
P2521 – ST'BY STA (SEE. SD113A)	86	AL121	21	
	85	AL122	22	
P2601 – ST'BY STA (SEE. SD114)	86	AL123	23	
	85	AL124	24	

NO.1 GSP

1T2		

0	1	2	3	4	5
6	7	8	9	10	11

PROJECT No.	S5130	TITLE	TERMINAL ARRANGEMENT (NO.1 GROUP STARTER PANEL)
HME		SHEET No.	T03

NO.1 GSP

1T3

P2331 (SEE. SD108B)	201	L11	1	P2333 (MC27) (U)
	202	L12	2	
	62	C11	3	
	64	C13	4	
	66	C11	5	
	203	E11(+)	6	
	204	E12(−)	7	
P2521 (SEE. SD113B)	205	L21	8	
	206	L22	9	
	62	C21	10	
	64	C23	11	
	66	C21	12	
	207	E21(+)	13	
	208	E22(−)	14	
INTER CONN. FOR P3121 (SEE. SD113B , SD211B)	211	L31	15	
	212	L32	16	
	213	C31	17	
	214	C33	18	
	215	C31	19	
	216	E31(+)	20	
	217	E32(−)	21	
P2301,02 (SEE. SD107B)	26	L11	1	P2325 (MC19) (U)
	29	L12	2	
	201	L13	3	
	202	L14	4	
	62	C12	5	
	64	C13	6	
	66	C11	7	
INTER CONN. FOR P2811,12 (SEE. SD107B , SD205B)	203	L21	8	
	204	L22	9	
	205	L23	10	
	206	L24	11	
	207	C22	12	
	208	C23	13	

YARD CABLE No.
YARD CABLE CORE No.
TERMINAL No.
INTERNAL CABLE No.
CIRCUIT No.

NO.1 GSP

1T3

	209	C21	14	
P2301,02 (SEE. SD107A ~SD107B)	101	L31	1	P2327 (MC7) (U) 3
	102	L32	2	
	62	C32	3	
	64	C33	4	
	66	C31	5	
	26	L41	1	P2303 (MC19)
	29	L42	2	
	62	C42	3	
	64	C43	4	
	66	C41	5	
	33	PS1	6	
	29	SV1	7	
P2331 (SEE. SD108A)	26	L51	8	
	29	L52	9	
	62	C52	10	
	64	C53	11	
	66	C51	12	
P2401,02 (SEE. SD109A ~SD109B)		SH1	W	P2403 (D2)
		SH2	B	
	26	L1	1	P2404 (MC19)
	29	L2	2	
	62	C2	3	
	64	C3	4	
	66	C1	5	

NO.1 GSP

1T3

	71	PS11	6	
	72	PS12	7	
	73	PS21	8	
	74	PS22	9	
	35	SV1	1	P2407 (MC12)
	29	SV2	2	
	29	SV3	3	
	29	SV4	4	
	45	PS1	5	
	46	PS2	6	
	44	TS1	7	
	47	TS2	8	
SPARE				

NO.1 GSP

1T4

P2001 − ES2 (SEE. SD101A)	T361	T361		INTER CONN. TO. MSBD (NO.1 AC440V FEED PANEL)
	T362	T362		
P2411 − ES2 (SEE. SD110)	T363	T363		
	T364	T364		
P2601 − ES2 (SEE. SD114)	T365	T365		
	T366	T366		
P2211 − ES1+CT1 (SEE. SD106A)	T367	T367		
	T368	T368		
SPARE				

0	1	2	3	4	5	
6	7	8	9	10	11	

PROJECT No.	S5130	TITLE	TERMINAL ARRANGEMENT (NO.1 GROUP STARTER PANEL)
HME		SHEET No.	T04

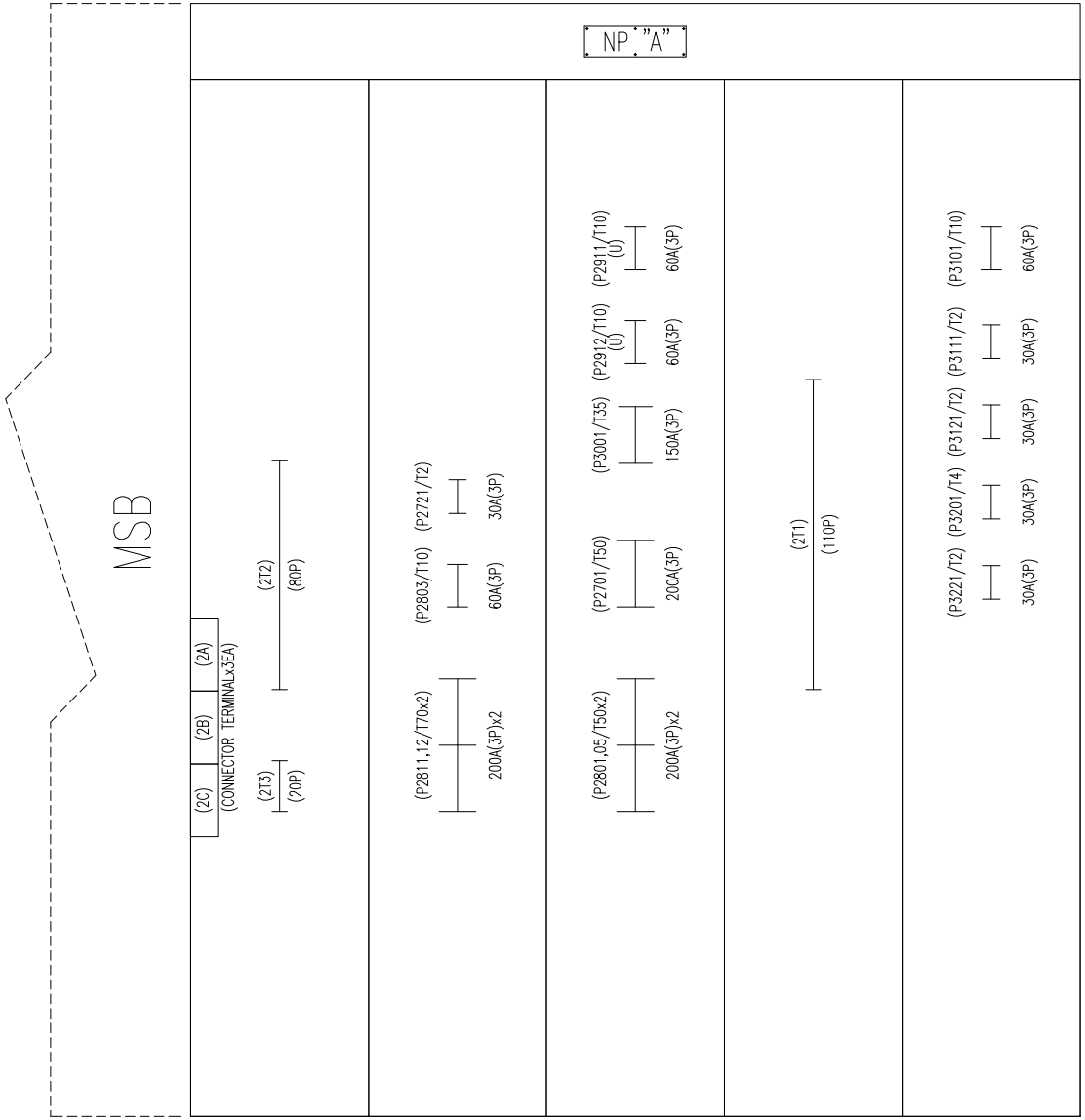

(OMITTED PAGE : T05)

PROJECT No.	S5130	TITLE	TERMINAL ARRANGEMENT (NO.2 GROUP STARTER PANEL)
	HME	SHEET No.	T06

0	1	2	3	4	5
6	7	8	9	10	11

NO.2 GSP

	2T1			
P2911 (SEE. SD206A)	26	L11	1	P2913 (MC12) (U)
	28	L12	2	
	29	L13	3	
	62	C11	4	
	64	C12	5	
	66	C13	6	
	67	C14	7	
P2912 (SEE. SD207)	26	L21	8	
	29	L22	9	
	62	C22	10	
	64	C23	11	
	66	C21	12	
P3101 (SEE. SD209)	101	L11	1	P3103 (MC7) (U)
	102	L12	2	
	62	C12	3	
	64	C13	4	
	66	C11	5	
	26	L1	1	P3102 (MC7)
	29	L2	2	
	62	C2	3	
	64	C3	4	
	66	C1	5	
P3111 (SEE. SD210)	101	L11	1	P3113 (MC7) (U)
	102	L12	2	
	62	C12	3	
	64	C13	4	
	66	C11	5	
	26	L1	1	P3112 (MC7)
	29	L2	2	
	62	C2	3	
	64	C3	4	
	66	C1	5	

YARD CABLE No.
YARD CABLE CORE No.
TERMINAL No.
INTERNAL CABLE No.
CIRCUIT No.

NO.2 GSP

	2T1			
P3121 (SEE. SD211A)	26	L1	1	P3122 (MC7)
	29	L2	2	
	62	C2	3	
	64	C3	4	
	66	C1	5	
P3201 (SEE. SD212)	67	LS11	1	P3202 (MC2)
	62	LS12	2	
	62	LS13	1	P3203 (MC2)
	68	LS14	2	
	26	L1	1	P3206 (MC7)
	29	L2	2	
	62	C2	3	
	64	C3	4	
	66	C1	5	
P3221 (SEE. SD213)	67	LS11	1	P3222 (MC2)
	62	LS12	2	
	26	L1	1	P3223 (MC7)
	29	L2	2	
	62	C2	3	
	64	C3	4	
	66	C1	5	
P2801,05 (SEE. SD203A)	26	L1	1	P2802 (MC7)
	29	L2	2	
	62	C2	3	
	64	C3	4	
	66	C1	5	
P3001 (SEE. SD208A ~SD208B)		SH1	W	P3004 (D2)
		SH2	B	

NO.2 GSP

	2T1			
	26	L1	1	P3003 (MC7)
	29	L2	2	
	62	C2	3	
	64	C3	4	
	66	C1	5	
	35	SV1	1	P3002 (MC12)
	29	SV2	2	
	29	SV3	3	
	29	SV4	4	
	45	PS1	5	
	46	PS2	6	
	44	TS1	7	
	47	TS2	8	
SPARE				

0	1	2	3	4	5						
6	7	8	9	10	11						

PROJECT No.	S5130	TITLE	TERMINAL ARRANGEMENT (NO.2 GROUP STARTER PANEL)
HME		SHEET No.	T07

NO.2 GSP

	2T2			
P2721 (SEE. SD202)	26	L1	1	P2722 (MC7)
	29	L2	2	
	62	C2	3	
	64	C3	4	
	66	C1	5	
P2803 (SEE. SD204)	26	L1	1	P2804 (MC7)
	29	L2	2	
	62	C2	3	
	64	C3	4	
	66	C1	5	
P2701 (SEE. SD201A)	26	L1	1	P2703 (MC7)
	29	L2	2	
	62	C2	3	
	64	C3	4	
	66	C1	5	
P2811,12 (SEE. SD205A ~SD205B)	26	L1	1	P2813 (MC12)
	29	L2	2	
	62	C2	3	
	64	C3	4	
	66	C1	5	
	33	PS1	6	
	29	SV1	7	
	101	L11	1	P2821 (MC7) (U) 3
	102	L12	2	
	62	C12	3	
	64	C13	4	
	66	C11	5	

YARD CABLE No.
YARD CABLE CORE No.
TERMINAL No.
INTERNAL CABLE No.
CIRCUIT No.

NO.2 GSP

	2T2			
	211	L21	1	P2815 (MC12)
	212	L22	2	
INTER CONN. FOR P2301,02 (SEE. SD107B , SD205B)	221	L31	3	
	222	L32	4	
	223	L33	5	
	224	L34	6	
P2811,12 (SEE. SD205B)	28A	L23	7	
	28B	L24	8	
P2811,12 – ABNORMAL (SEE. SD205A)	88	AL201	1	P3311 (MC19)
	89	AL202	2	
P2911 – ABNORMAL (SEE. SD206A)	88	AL203	3	
	89	AL204	4	
P2912 – ABNORMAL (SEE. SD207)	88	AL205	5	
	89	AL206	6	
P3001 – ABNORMAL (SEE. SD208A)	90	AL207	7	
	89	AL208	8	
P3201 – ABNORMAL (SEE. SD212)	88	AL209	9	
	89	AL210	10	
SPARE				

NO.2 GSP

	2T3			
P2701 – ES2 (SEE. SD201A)	T461	T461		INTER CONN. TO. MSBD (NO.2 AC440V FEED PANEL)
	T462	T462		
P2721 – ES2 (SEE. SD202)	T463	T463		
	T464	T464		
P3201 – ES2 (SEE. SD212)	T465	T465		
	T466	T466		
P3221 – ES2 (SEE. SD213)	T467	T467		
	T468	T468		
P2911 – ES1+CT1 (SEE. SD206A)	T469	T469		
	T470	T470		
P2912 – ES1+CT1 (SEE. SD207)	T471	T471		
	T472	T472		
SPARE				

0	1	2	3	4	5	
6	7	8	9	10	11	

PROJECT No.	S5130	TITLE	TERMINAL ARRANGEMENT (NO.2 GROUP STARTER PANEL)
HME		SHEET No.	T08

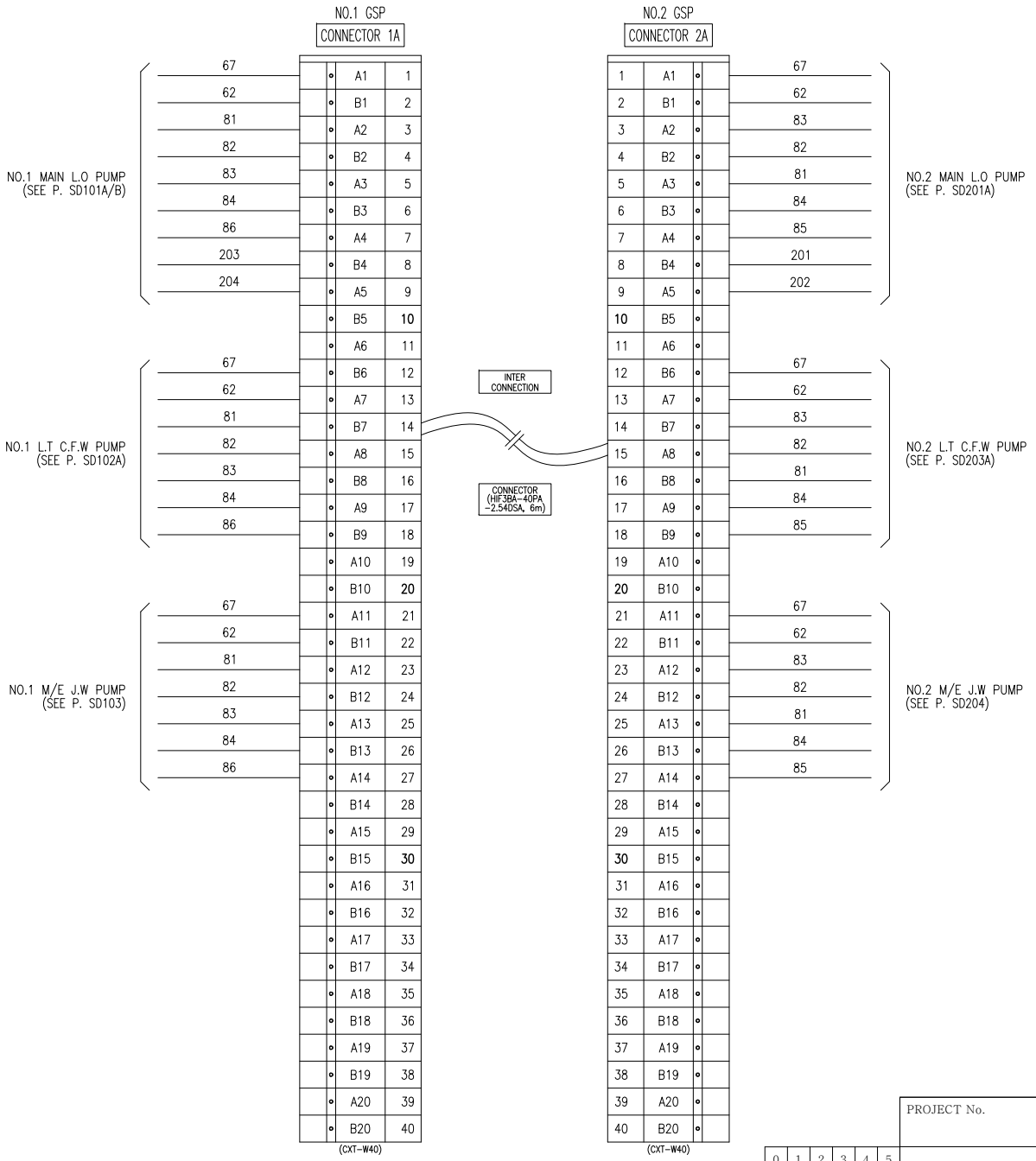

(DELETED PAGE : T09, T10)

PROJECT No.	TITLE	
S5130	TITLE	TERMINAL ARRANGEMENT (INTERNAL CONNECTION)
HME	SHEET No.	T11

0	1	2	3	4	5
6	7	8	9	10	11

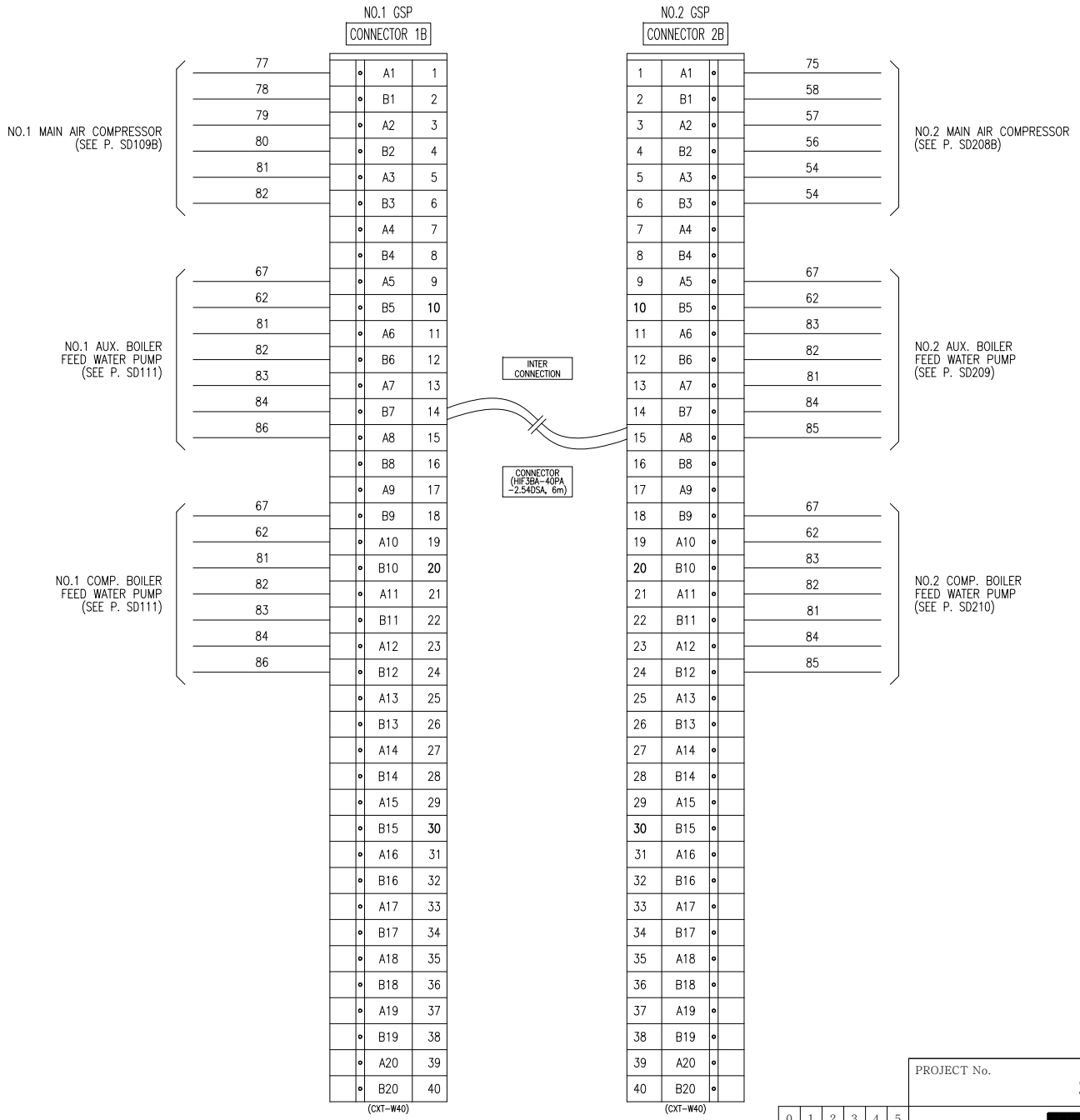

PROJECT No.	TITLE	
S5130	TITLE	TERMINAL ARRANGEMENT (INTERNAL CONNECTION)
HME	SHEET No.	T12

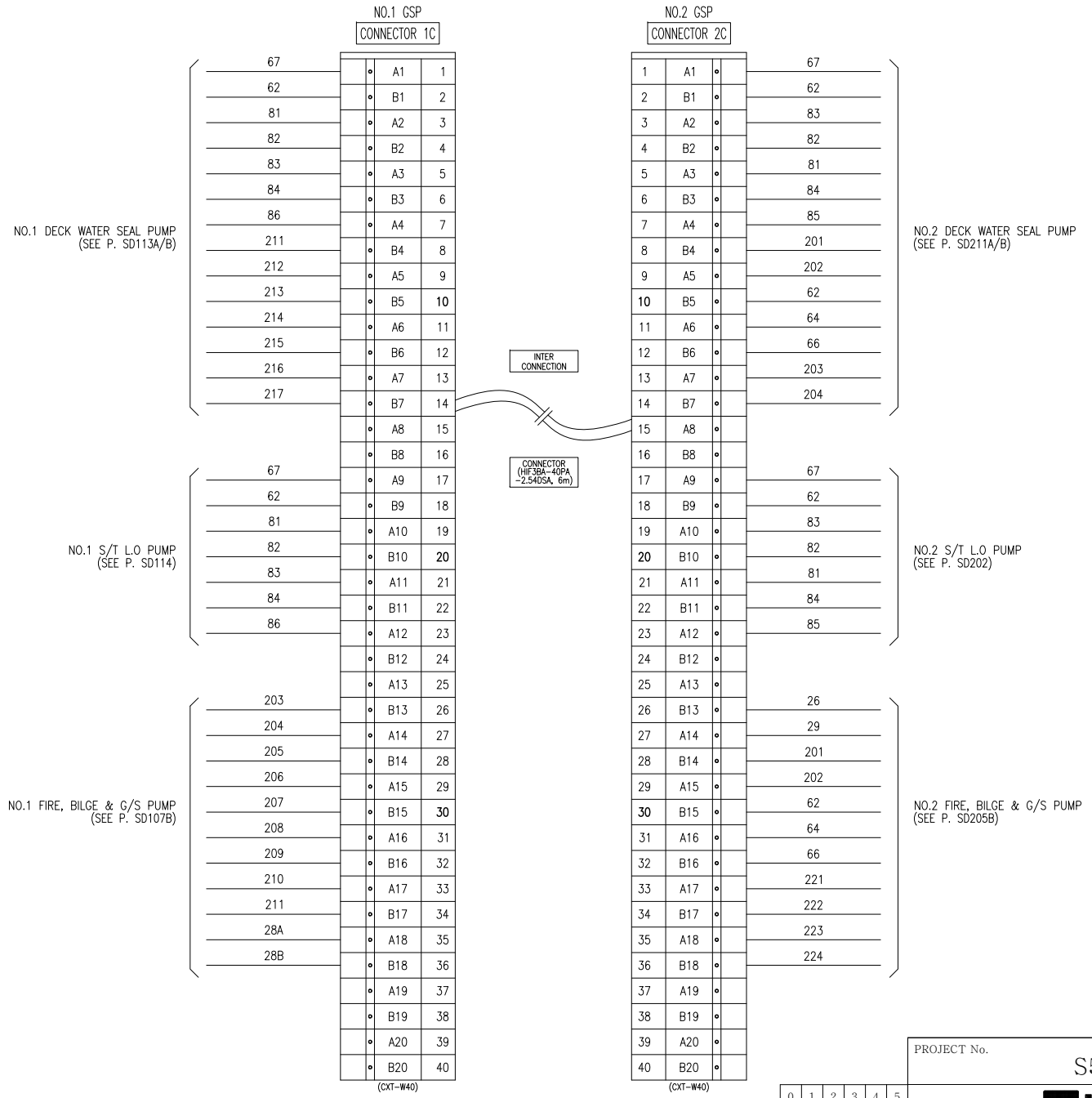

PROJECT No.	TITLE	
S5130	TERMINAL ARRANGEMENT (INTERNAL CONNECTION)	
HME	SHEET No.	T13

0	1	2	3	4	5
6	7	8	9	10	11

SHIP NO.	SPARE PART LIST FOR	SET PER VESSEL
S5130	GROUP STARTER PANEL	1 SET

ITEM NO.	NAME OF PARTS	OUT LINE VIEW	SPECIFICATION	Q'TY	MAKER
1	MOLDED CASE CIRCUIT BREAKER		UCB100H, FDC TYPE 125/15A	1	HYUNDAI
2	MOLDED CASE CIRCUIT BREAKER		UCB100H, FDC TYPE 125/15A, SHT AC220V	1	HYUNDAI
3	MOLDED CASE CIRCUIT BREAKER		UCB100H, FDC TYPE 125/20A	1	HYUNDAI
4	MOLDED CASE CIRCUIT BREAKER		UCB100H, FDC TYPE 125/30A, SHT AC220V	1	HYUNDAI
5	MOLDED CASE CIRCUIT BREAKER		UCB100H, FDC TYPE 125/50A	1	HYUNDAI
6	MOLDED CASE CIRCUIT BREAKER		UCB100H, FDC TYPE 125/50A, SHT AC220V	1	HYUNDAI
7	MOLDED CASE CIRCUIT BREAKER		UCB100H, FDC TYPE 125/100A	1	HYUNDAI
8	MOLDED CASE CIRCUIT BREAKER		UCB250H, FDC TYPE 250/150A	1	HYUNDAI
9	MOLDED CASE CIRCUIT BREAKER		UCB250H, FDC TYPE 250/175A, SHT AC220V	1	HYUNDAI
10	MOLDED CASE CIRCUIT BREAKER		UCB250H, FDC TYPE 250/200A	1	HYUNDAI

SHIP NO.	SPARE PART LIST FOR	SET PER VESSEL
S5130	GROUP STARTER PANEL	1 SET

ITEM NO.	NAME OF PARTS	OUT LINE VIEW	SPECIFICATION	Q'TY	MAKER
11	DISCON. SWITCH		UCD250H, FDC TYPE 250/250A	1	HYUNDAI
12	MAGNETIC CONTACTOR		UMC 9 (AC220V, 60Hz)	2	HYUNDAI
13	MAGNETIC CONTACTOR		UMC 9 (AC440V, 60Hz)	2	HYUNDAI
14	MAGNETIC CONTACTOR		UMC 18 (AC220V, 60Hz)	1	HYUNDAI
15	MAGNETIC CONTACTOR		UMC 18 (AC440V, 60Hz)	1	HYUNDAI
16	MAGNETIC CONTACTOR		UMC 25 (AC220V, 60Hz)	1	HYUNDAI
17	MAGNETIC CONTACTOR		UMC 25 (AC440V, 60Hz)	1	HYUNDAI
18	MAGNETIC CONTACTOR		UMC 32 (AC440V, 60Hz)	1	HYUNDAI
19	MAGNETIC CONTACTOR		UMC 40 (AC440V, 60Hz)	1	HYUNDAI
20	MAGNETIC CONTACTOR		UMC 50 (AC440V, 60Hz)	1	HYUNDAI

PROJECT No. S5130				TITLE	SPARE PART LIST
HME				SHEET No.	S01

SHIP NO.	SPARE PART LIST FOR	SET PER VESSEL
S5130	GROUP STARTER PANEL	1 SET

ITEM NO.	NAME OF PARTS	OUT LINE VIEW	SPECIFICATION	Q'TY	MAKER
21	MAGNETIC CONTACTOR	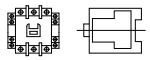	UMC 65 (AC440V, 60Hz)	1	HYUNDAI
22	CONTROL RELAY	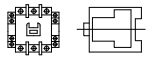	UMX31 (AC220V, 60Hz)	4	HYUNDAI
23	AUX. RELAY	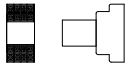	HR705-4PL (AC220V, 60Hz)	2	KACON
24	FUSE		SB-C1 1A	10	SB FUSE
25	FUSE		SB-C1 3A	10	SB FUSE
26	PUSH BUTTON SWITCH	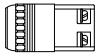	YSAP12-22R (RED)	1	YONGSUNG
27	PUSH BUTTON SWITCH	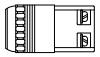	YSAP12-22B (BLACK)	1	YONGSUNG
28	PILOT LAMP	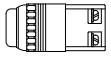	YSPL2-AL24R (RED)	1	YONGSUNG
29	PUSH BUTTON SWITCH with LAMP	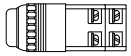	YSNPBL2-AL24G (GREEN)	1	YONGSUNG
30	SPARE PARTS BOX		600Wx400Dx400H (COLOR : 7.5BG 7/2)	1	HME

SHIP NO.	SPARE PART LIST FOR	SET PER VESSEL
S5130	GROUP STARTER PANEL	1 SET

ITEM NO.	NAME OF PARTS	OUT LINE VIEW	SPECIFICATION	Q'TY	MAKER
31					
32					
33					
34					
35					
36					
37					
38					
39					
40					

PROJECT No.	TITLE	SPARE PART LIST
S5130	SHEET No.	S02

HME